SINGLE OVEN GAS RANGE

verona

DESIGN CERTIFIED ®

CERTIFIED ®

Models: VDFSGG365..

INSTALLATION INSTRUCTIONS

IMPORTANT - PLEASE READ AND FOLLOW

- Before beginning, please read these instructions completely and carefully.
- Do not remove permanently affixed labels, warnings, or plates from the product. This may void the warranty.
- Please observe all local and national codes and ordinances.
- Please ensure that this product is properly grounded.
- **The installer should leave these instructions with the consumer who should retain for local inspector's use and for future reference.**
- The electrical plug should always be accessible.

Installation must conform with local codes or in the absence of codes, the National Fuel Gas Code ANSI Z223.1/NFPA 54 - latest edition. Electrical installation must be in accordance with the National Electrical Code, ANSI/NFPA70 - latest edition and/or local codes. IN CANADA: Installation must be in accordance with the current CAN/CGA-B149.1 National Gas Installation Code or CAN/CGA-B149.2, Propane Installation Code and/or local codes. Electrical installation must be in accordance with the current CSA C22.1 Canadian Electrical Codes Part 1 and/or local codes.

INSTALLATION IN MANUFACTURED (MOBILE) HOME: The installation must conform with the Manufactured Home Construction and Safety Standard, Title 24 CFR, Part 3280 [formerly the Federal Standard for Mobile Home Construction and Safety, Title 24, HUD (Part 280)] or, when such standard is not applicable, the Standard for Manufactured Home Installations, ANSI/NCSBCS A225.1, or with local codes where applicable.

INSTALLATION IN RECREATIONAL PARK TRAILERS: The installation must conform with state or other codes or, in the absence of such codes, with the Standard for Recreational Park Trailers, ANSI A119.5.

Installation of any gas-fired equipment should be made by a licensed plumber. A manual shut-off valve must be installed in an accessible location in the gas line external to the appliance for the purpose of turning on or shutting off gas to the appliance (In Massachusetts such shutoff devices should be approved by the Board of State Examiners of Plumbers & Gas Fitters).

If an external electrical source is utilized, the appliance, when installed, must be electrically grounded in accordance with local codes or, in the absence of local codes, with the national Electrical Code, ANSI/NFPA 70.

Some models are supplied with a protective film on steel and aluminium parts. This film must be removed before installing/using the appliance.

FOR INSTALLER ONLY

THIS RANGE IS FOR RESIDENTIAL USE ONLY

⚠ WARNING

Tip-Over Hazard

A child or adult can tip the range and be killed.

Install anti-tip device to range and/or structure per installation instructions.

Engage the range to the anti-tip device Installed to the structure.

Re-engage anti-tip device if range is moved.

Failure to follow these instructions can result in death or serious burns to children and adults.

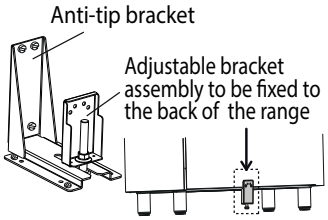

To verify the anti-tip bracket is installed and engaged:

- Slide range forward.
- Look for the anti-tip bracket securely attached to floor or wall.
- Look for the adjustable bracket assembly securely attached to the back of the range.
- Slide range back so bolt head, on the adjustable bracket assembly, is under anti-tip bracket.
- See installation instructions for details.

⚠ WARNING !

If the information in this manual is not followed exactly, a fire or explosion may result causing property damage, personal injury, or death.

– **Do not store or use gasoline or other flammable vapors and liquids in the vicinity of this or any other appliance.**

– **NEVER use this appliance as a space heater to heat or warm the room. Doing so may result in carbon monoxide poisoning and overheating of the appliance.**

– **WHAT TO DO IF YOU SMELL GAS:**

- **Do not try to light any appliance.**
- **Do not touch any electrical switch.**
- **Do not use any phone in your building.**
- **Immediately call your gas supplier from a neighbor's phone. Follow the gas supplier's instructions.**
- **If you cannot reach your gas supplier, call the fire department.**

– **Installation and service must be performed by a qualified installer, service agency, or the gas supplier.**

DATA PLATE

The product data plate is attached below the bottom drawer. To check the label, it is necessary to remove the drawer (see “Setting the pressure regulator” for instructions on drawer removal).

CONVERSION LABEL

WARNING: This product can expose you to chemicals including formaldehyde, which is known to the State of California to cause cancer, and lead, which is known to the State of California to cause birth defects or other reproductive harm. For more information go to www. P65Warnings.ca.gov.

This appliance is designed and manufactured solely for the cooking of domestic (household) food and is not suitable for any non-domestic application and therefore should not be used in a commercial environment.
The appliance warranty will be void if the appliance is used within a non-domestic environment i.e. a semi commercial, commercial or communal environment.

INSTALLATION INSTRUCTIONS

WARNING!

THIS APPLIANCE MUST BE INSTALLED BY A QUALIFIED INSTALLER.
Installation must conform with local codes.
Improper installation, adjustment, alteration, services, or maintenance can cause injury or property damage.
Consult a qualified installer, service agente or the gas supplier.

WARNING!!	**IMPORTANT: The use of suitable protective clothing/gloves is recommended when handling or installing this appliance.**

TOOLS NEEDED FOR INSTALLATION (NOT SUPPLIED WITH THE APPLIANCE)

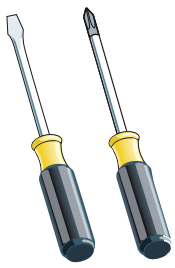 Screwdriver	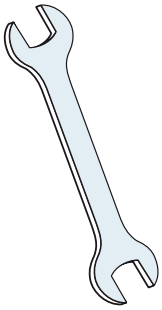 2 - Wrench	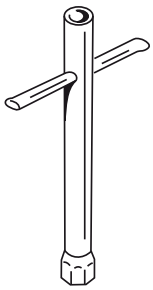 T-handle wrench	Pencil	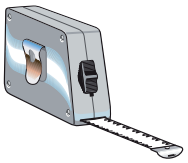 Tape measure
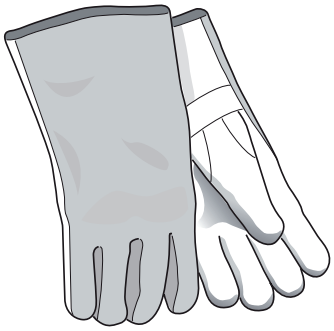 Suitable protective gloves	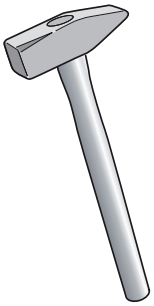 Hammer	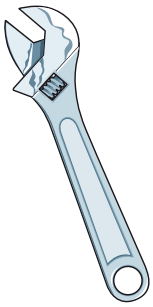 Adjustable wrench	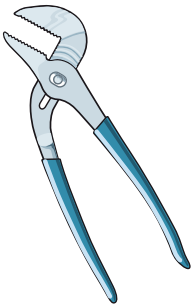 Adjustable pliers	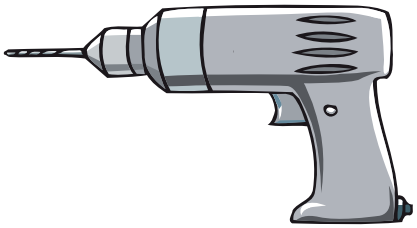 Drill

GENERAL INFORMATION

1. Installation must conform with local codes or, in the absence of local codes, with the **National Fuel Gas Code**, ANSI Z223.1/NFPA 54 - Latest Edition, CAN/CGA-B149.1 or CAN/CGA-B149.2.

2. Installation in manufactured (mobile) home: installation must conform with the **Manufactured Home Construction and Safety Standard, Title 24 CFR, Part 3280 [formerly the Federal Standard for Mobile Home Construction and Safety, Title 24, HUD (Part 280)]** or, when such standard is not applicable, the Standard for **Manufactured Home Installations, ANSI/NCSBCS A225.1**, or with local codes where applicable.

3. Installation in Recreational Park Trailers: installation must conform with state or other codes or, in the absence of such codes, with the Standard for **Recreational Park Trailers, ANSI A119.5.**

4. To eliminate risk of burns or fire by reaching over heated surface units, cabinet storage located above the surface units should be avoided.

5. Air curtain or other overhead range hoods, which operate by blowing a downward air flow on to a range, shall not be used in conjunction with gas ranges other than when the hood and range have been designed, tested and listed by an independent test laboratory for use in combination.

6. **WARNING!!**
   This appliance shall not be used for space heating. This information is based on safety considerations.

7. All openings in the wall behind the appliance and in the floor under the appliance shall be sealed.

8. Keep appliance area clear and free from combustible materials, gasoline, and other flammable vapors.

9. Do not obstruct the flow of combustion and ventilation air.

10. Disconnect the electrical supply to the appliance before servicing.

11. When removing appliance for cleaning and/or service;
    A. Shut off gas at main supply.
    B. Disconnect AC power supply.
    C. Disconnect gas line to the inlet pipe.
    D. Carefully remove the range by pulling outward.
    CAUTION: Range is heavy; use care in handling.

12. **Electrical Requirement**
    Electrical installation should comply with national and local codes.

13. **Air Supply and Ventilation**
    The installer must refers to local/national codes.

14. **Gas Manifold Pressure**
    Natural gas - 4.0” W.C.P.
    LP/Propane - 11.0” W.C.P.

15. The misuse of oven door (e.g. stepping, sitting, or leaning on them) can result in potential hazards and/or injuries.

16. When installing or removing the range for service, a rolling lift jack should be used. Do not push against any of the edges of the range in an attempt to slide it into or out of the installation. Pushing or pulling a range (rather than using a lift jack) also increases the possibility of bending the leg spindles or the internal coupling connectors.

WARNING!!

ELECTRICAL GROUNDING INSTRUCTIONS

The range must be electrically grounded in accordance with local codes or, in the absence of local codes, with the National Electrical Code, ANSI/NFPA No. 70-latest edition, in Canada Canadian Electrical Code.

Installation should be made by a licensed electrician.

FOR PERSONAL SAFETY, THIS APPLIANCE MUST BE PROPERLY GROUNDED.

If an external electrical source is utilized, the installation must be electrically grounded in accordance with local codes or, in the absence of local codes, with the national Electrical Code, ANSI/NFPA 70.

This appliance is equipped with a three-prong grounding plug (NEMA 5-15P) for your protection against shock hazard and should be plugged directly into a properly grounded socket.

Do not under any circumstances cut or remove the third (ground) prong from the power plug.

REPLACEMENT PARTS

Only authorized replacement parts may be used in performing service on the range. Replacement parts are available from factory authorized parts distributors. Contact the nearest parts distributor in your area.

PROXIMITY TO SIDE CABINETS

1. This range may be installed directly adjacent to existing 36” (914 mm) high base cabinets.

   Range dimensions:

   - width: 35 7/8” (911 mm) (width of cabinetry opening 36”, 914 mm)
   - depth: 25” 1/4 (641 mm)
   - height (without backguard): MIN 35” 3/8 (898 mm) - MAX 37” 1/4 (946 mm)
   - backguard (height): 7/8” (22 mm) or 3” (76 mm)
     NOTE: The 7/8” (22mm) backguard is already fitted on the appliance while the 3” (76) backguard can be purchased as a separate kit.

     IT IS MANDATORY TO INSTALL AND USE THE APPLIANCE WITH THE BACKGUARD CORRECTLY IN PLACE.

   Gas line opening: Wall - 7/32” (6 mm) from the right side for 23” 9/16 (599 mm) towards the centre of range; from 8” 1/8 (207 mm) to 10” 1/8 (257 mm) [depending on feet regulation] from the floor.

   Grounded outlet: The electric cord with 3-prong ground plug (NEMA 5-15P) has a length of 72” (1830 mm). The grounded outlet should be located 7/32” (6 mm) from the left side for 11” 13/16 (300 mm) towards the centre of range; from 8” 1/8 (207 mm) to 10” 1/8 (257 mm) [depending on feet regulation] from the floor.

2. Range may be installed with zero clearance adjacent to (against) combustible construction at the rear and on the sides below the cooktop. The range CANNOT be installed directly adjacent to sidewalls, tall cabinets, tall appliances, or other side vertical surfaces above 36” (914 mm) high.
   There must be a minimum of 11” 13/16 (300 mm) side clearance from the range to such combustible surfaces TO THE LEFT or TO THE RIGHT above the 36” (914 mm) high countertop.
   IMPORTANT: One side (left or right) above the 36” (914 mm) high countertop must always be kept clear.

3. The maximum upper cabinet depth recommended is 13” (330 mm). Wall cabinet above the range must be a minimum of 36” (911 mm) (see also “Additional information about minimum clearance from cooking surface to overhead cabinet or ventilation hood” here below) above the countertop for a width of minimum 36” (911 mm): it has to be centered with the range. Side wall cabinets above the range must be a minimum of 18” (457 mm) above the countertop.

4. Air curtain or other overhead range hoods, which operate by blowing a downward air flow on to a range, shall not be used in conjunction with gas ranges other than when the hood and range have been designed, tested and listed by an independent test laboratory for use in combination.

Additional information about minimum clearance from cooking surface to overhead cabinet or ventilation hood:

- 36” (914 mm), overhead cabinet centered above the cooktop (combustible/unprotected) (see also notes #1, #2, #3)
- 30” (762 mm), overhead cabinet centered above the cooktop (non-combustible/protected) (see also notes #1, #2, #3)
- 30” (762 mm), ventilation hood centered above the cooking surface (see also notes #4)

Note #1
To eliminate the risk of burns or fire by reaching over heated surface units, cabinet storage space located above the surface units should be avoided. If cabinet storage is to be provided, the risk can be reduced by installing a rangehood that projects horizontally a minimum of 5 “ (127mm) beyond the bottom of the cabinets.

Note #2
30” (762mm) minimum clearance between the top of the cooking surface and the bottom of an unprotected wood or metal cabinet; or 24” (610mm) minimum when bottom of wood or metal cabinet is protected by not less than 1/4” thick flame retardant millboard covered with not less than No. 28 MSG sheet steel, 0.015” (0.4 mm) thick stainless steel, 0.024” (0.6 mm) thick aluminum, or 0.020” (0.5 mm) thick copper.

Note #3
Non-combustible surfaces as defined in ‘National Fuel Gas Code’ (ANSI Z223.1, Current Edition). Clearances from non-combustible materials are not part of the ANSI Z21.1 scope and are not certified by CSA.

Note #4
Refer to local/national codes for ventilation requirements.

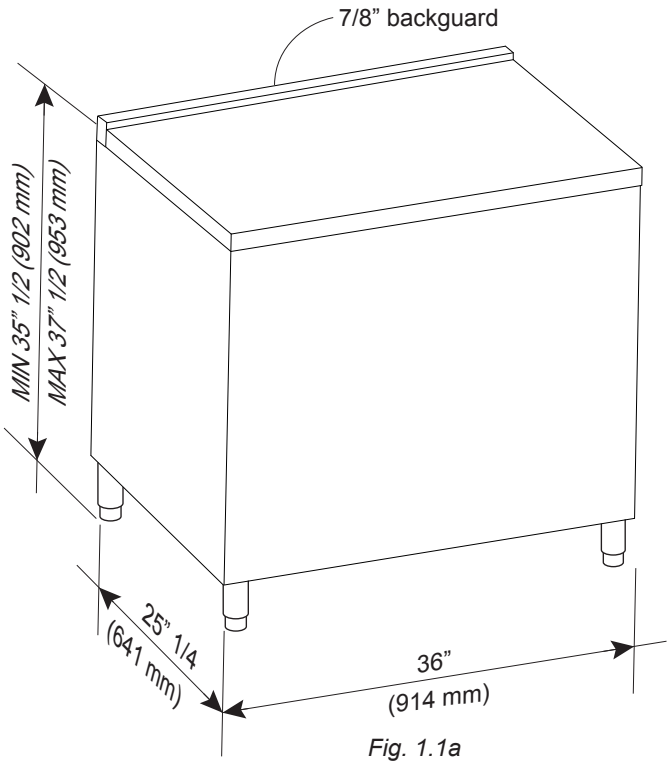

Fig. 1.1a

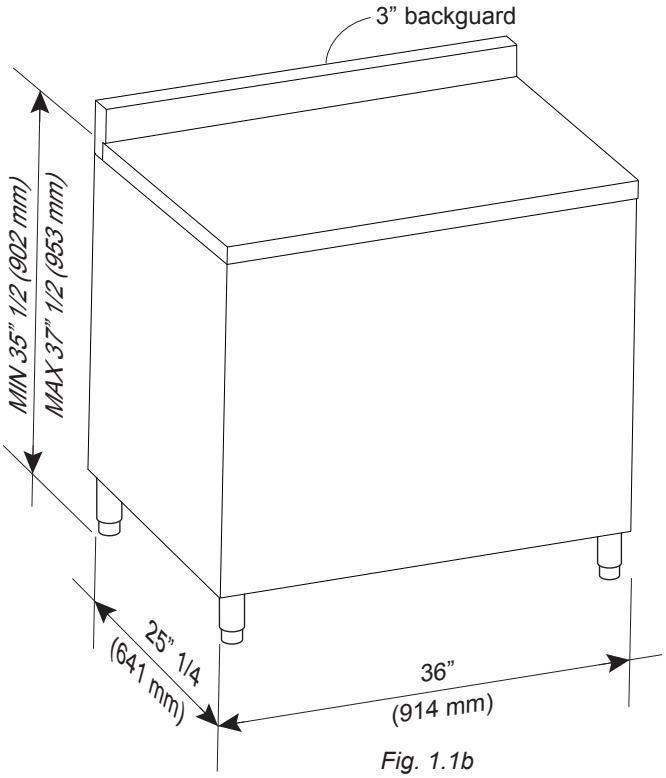

Fig. 1.1b

GAS AND ELECTRIC CONNECTION

Ref.	inch	mm
A	7/32”	6
B	23” 9/16	599
C	8” 1/8 - 10” 1/8 (*)	207 - 257 (*)
D	11” 13/16	300

(*) : Depending on feet regulation

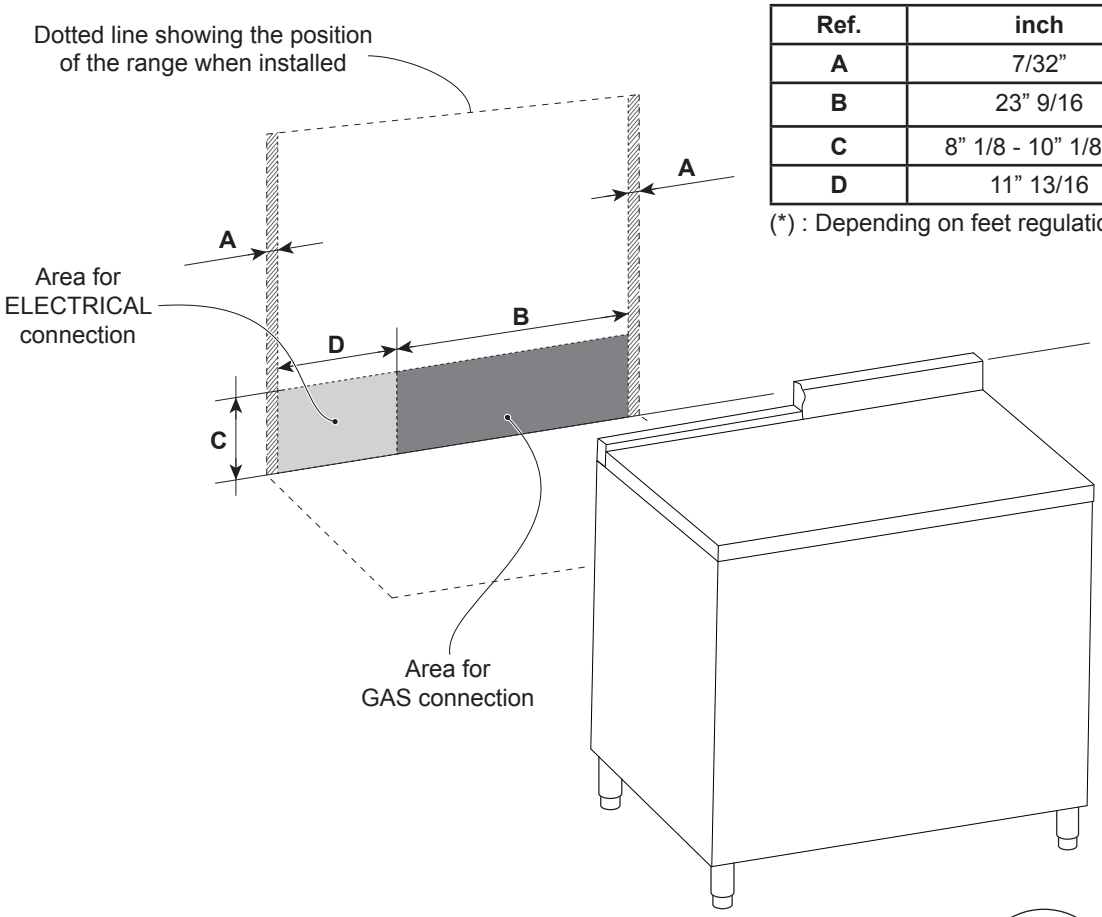

Fig. 1.2

BACKGUARD

- It is mandatory to install and use the appliance with either the 7/8” backguard or the optional 3” backguard correctly in place.
- The 7/8” backguard is already fitted to the appliance while the 3” backguard can be purchased as a separate kit.
- If replacing the 7/8” backguard with the 3” backguard, assemble it by using the same screws/spacers used for fixing the 7/8” backguard (figs. 1.3a, 1.3b).

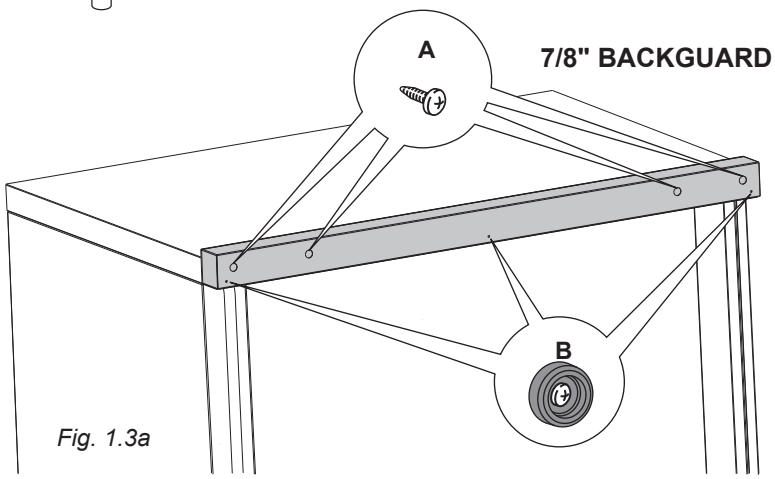

Fig. 1.3a

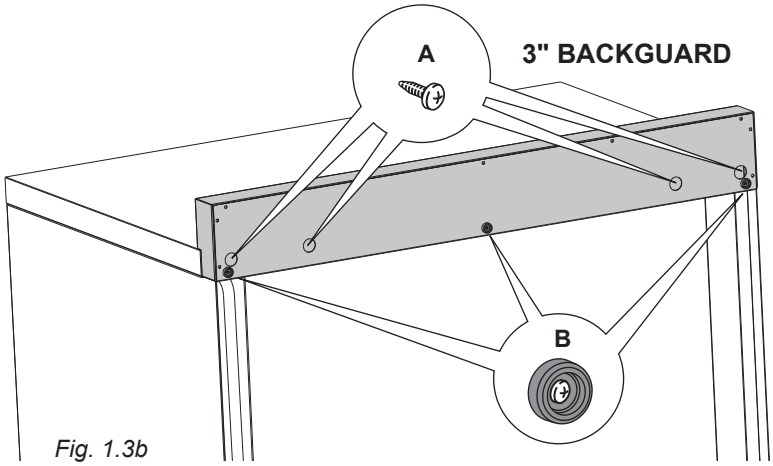

Fig. 1.3b

PROXIMITY TO SIDE CABINETS

Ref.	inch	mm
A	0”	0
B	37” 1/2 (*)	953 (*)
C	11” 13/16	300
D	36” minimum (**)	911 minimum (**)
E	18” minimum	457 minimum
F	13” maximum	330 maximum
G	20” minimum	500 minimum
H	0”	0

(*) Maximum height of cabinetry immediately adjacent to the range (from floor to countertop).
Depending on the height of the feet adjustment.
The cooking surface must sit flush or above countertop level.

(**) See also “Additional information about minimum clearance from cooking surface to overhead cabinet or ventilation hood” at page no.6.

Fig. 1.4a

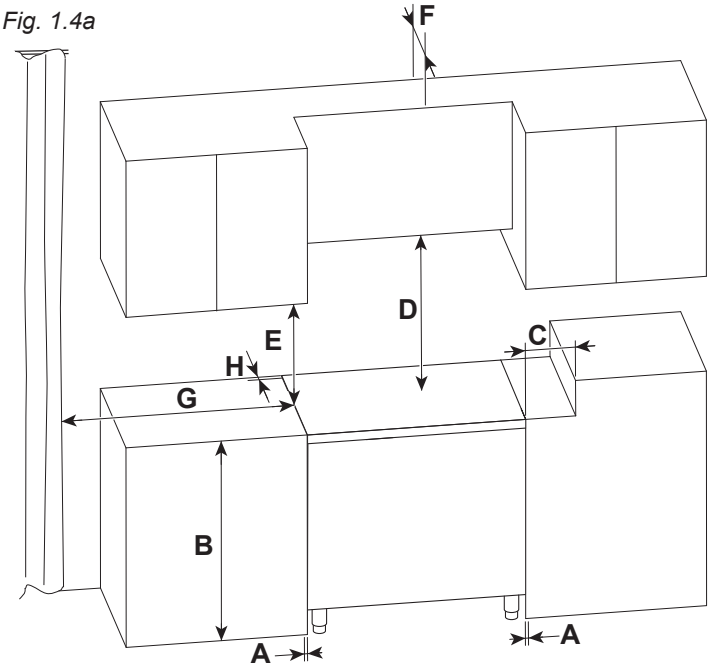

Fig. 1.4b

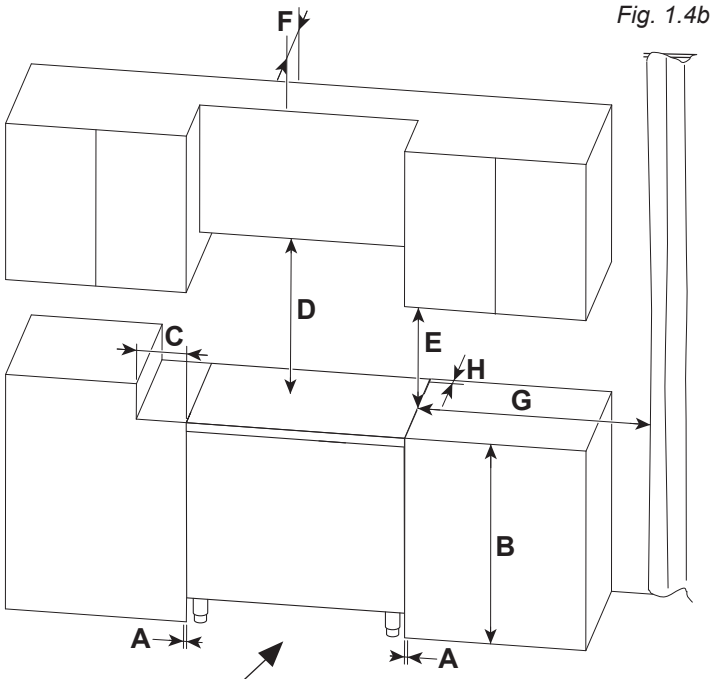

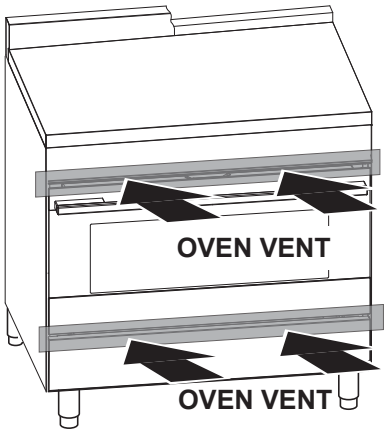

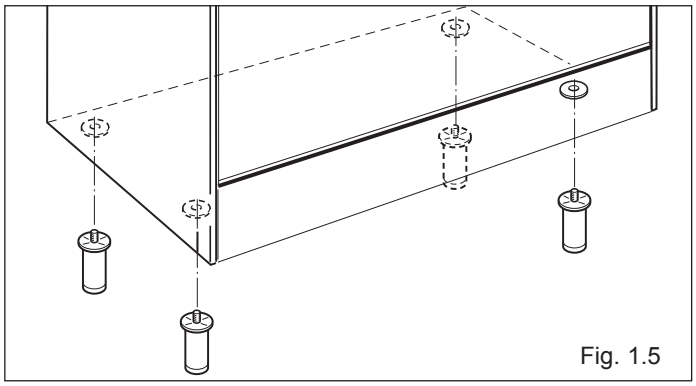
Fig. 1.5

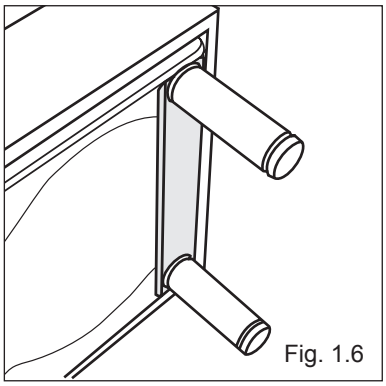
Fig. 1.6

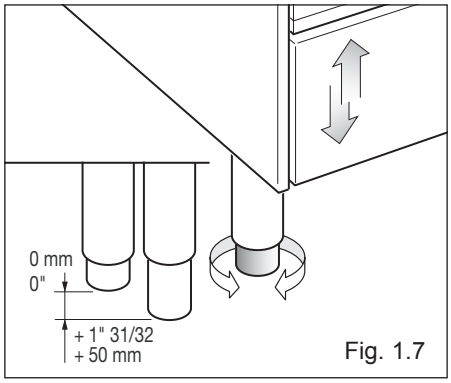

Fig. 1.7

FITTING THE ADJUSTABLE FEET

The adjustable feet must be fitted to the base of the cooker before use.

Rest the rear of the cooker on a piece of the polystyrene packaging exposing the base for the fitting of the feet.

ATTENTION: Most important! Pay special attention not to damage the range during this operation.

Fit the 4 legs by screwing them tight into the support base as shown in picture 1.5 - 1.6.

LEVELLING THE COOKER

The cooker may be levelled by screwing the lower ends of the feet IN or OUT (fig. 1.7). It is important to observe the directions of figure 1.7.

MOVING THE COOKER

WARNING
When raising cooker to upright position always ensure two people carry out this manoeuvre to prevent damage to the adjustable feet (fig. 1.8a).

WARNING
Be careful: do not lift the cooker by the door handle when raising to the upright position (fig. 1.8b).

WARNING
When moving cooker to its final position **DO NOT DRAG** (fig. 1.8c).
Lift feet clear of floor (fig. 1.8a).

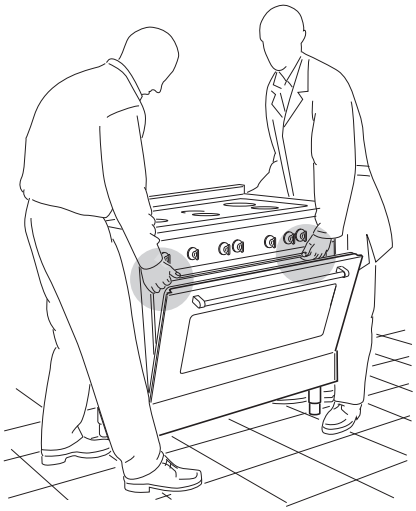
Fig. 1.8a

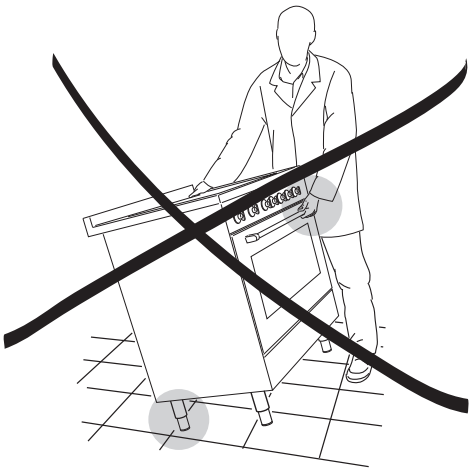
Fig. 1.8b

Fig. 1.8c

INSTALLING THE ANTI-TIP BRACKET

The anti-tip bracket has two components:

- the adjustable bracket
- the stability bracket

IMPORTANT!
You must install both parts of the anti-tip bracket and ensure they are properly fitted together to prevent the range from tipping.

To fit the anti-tip bracket

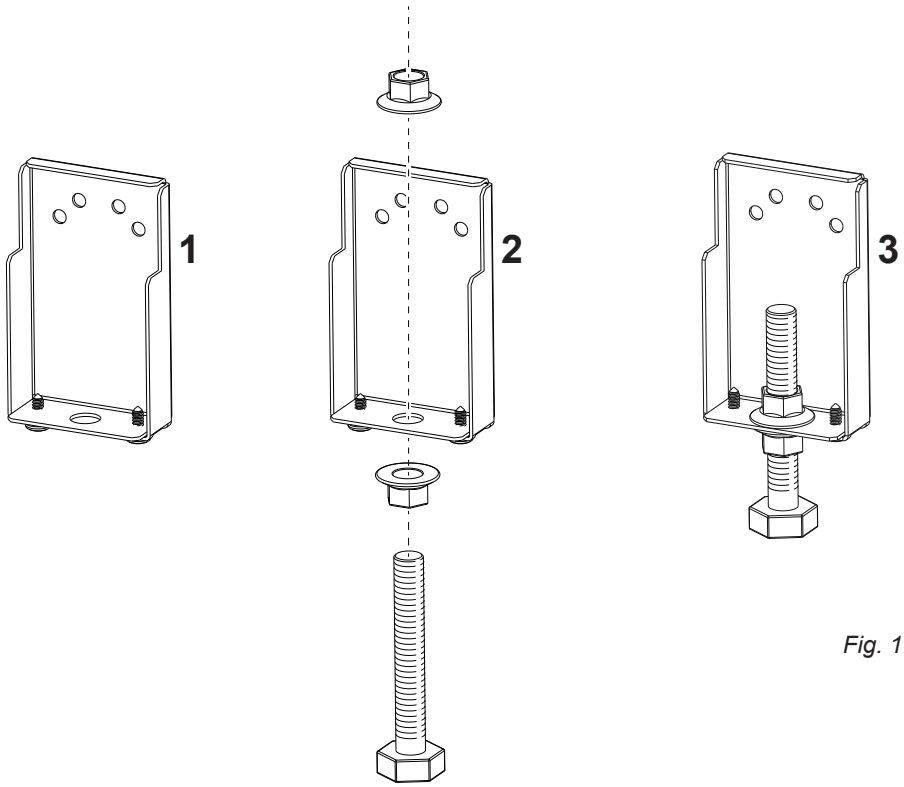

Fig. 1.9

1. Thread the bolt through the adjustable bracket and fix in place using the two supplied nuts. Ensure the nuts are well tightened.

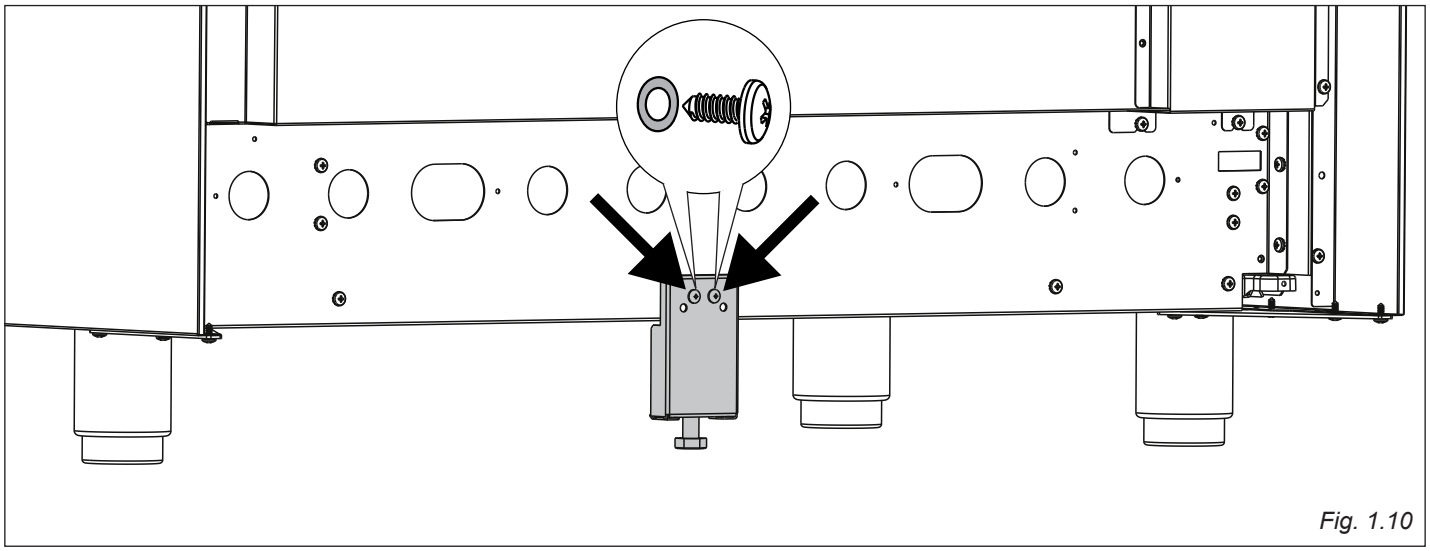

Fig. 1.10

2. Fix the adjustable bracket to the back of the range (centered on the lower edge) using the two supplied screws and washers.

3. Fix the stability bracket in place. It can be fixed as follows:

- To the floor OR on the rear wall by #4 screws (supplied).
- To the floor AND on the rear wall by #8 screws (supplied).
  - There are 8 x wood screws and 8 x screws with plastic sleeve anchors supplied with the range in two separate kits.
    Use the proper screws according to the type of material on the floor and/or wall.
- If using the plastic sleeve anchors: drill 5/16” (8mm) diameter holes and insert the supplied plastic sleeve anchors before attaching the stability bracket with the screws.

4. Slide the range into place, ensuring the bolt on the adjustable bracket slots under the stability bracket.

- Adjust the length of the bolt as necessary. Ensure the two nuts are well tightened after any adjustments.

IMPORTANT!

- **Use the proper screws to fix the stability bracket in place according to the type of material on the floor and/or wall.**
- **Before drilling and holes or inserting any screws into the floor or wall check that you will not damage any wiring or pipes.**

WARNING

Tip-Over Hazard

A child or adult can tip the range and be killed.

Install anti-tip device to range and/or structure per installation instructions.

Engage the range to the anti-tip device Installed to the structure.

Re-engage anti-tip device if range is moved.

Failure to follow these instructions can result in death or serious burns to children and adults.

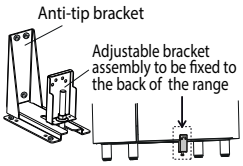

To verify the anti-tip bracket is installed and engaged:
- Slide range forward.
- Look for the anti-tip bracket securely attached to floor or wall.
- Look for the adjustable bracket assembly securely attached to the back of the range.
- Slide range back so bolt head, on the adjustable bracket assembly, is under anti-tip bracket.
- See installation instructions for details.

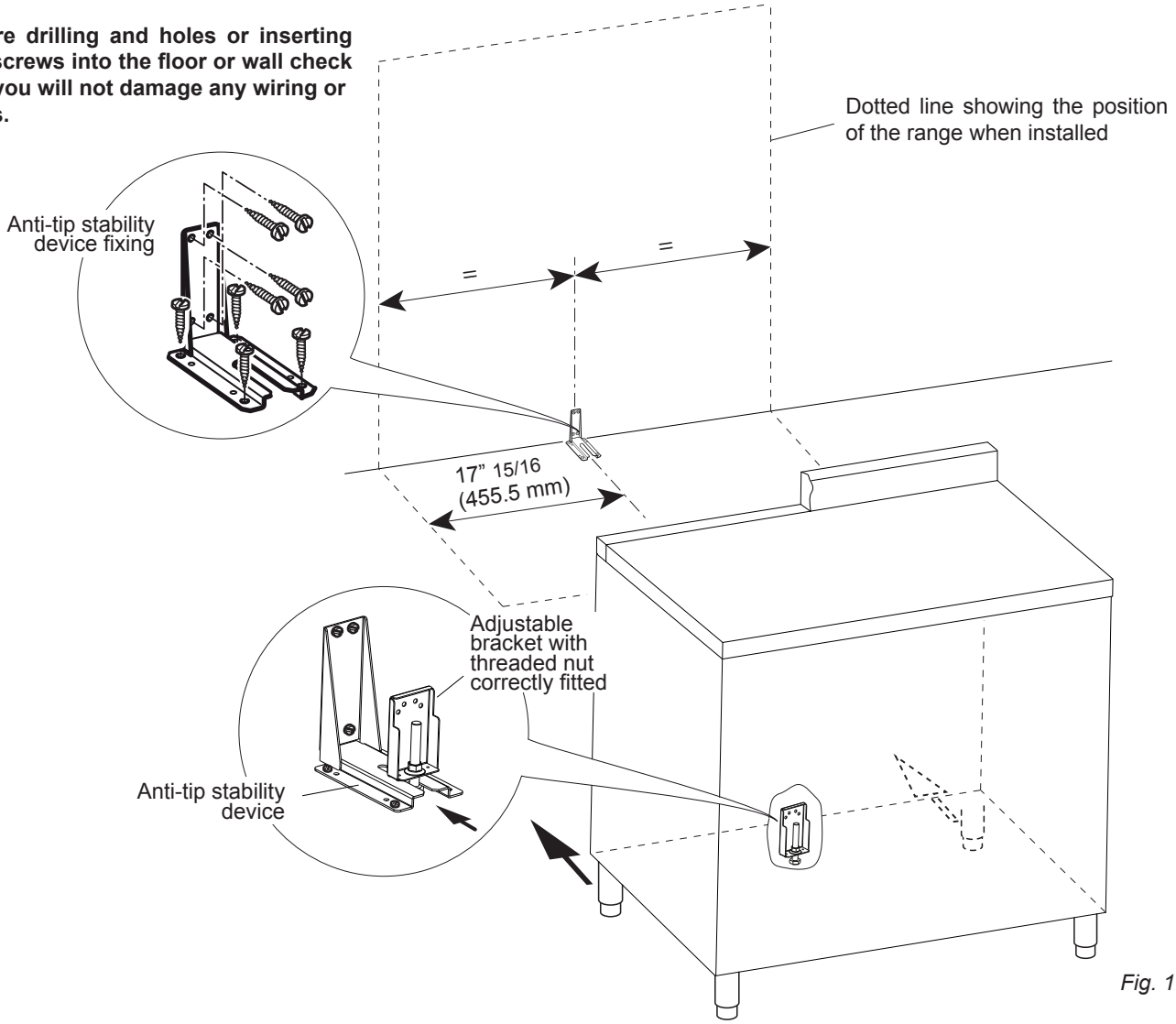

Fig. 1.11

INSTALLING THE COOKTOP FRONT GUARD (Only for the models without hob rail)

To increase the clearance between the front edge of the cooktop and the burners it is possible to install the cooktop front guard supplied with the appliance.

IMPORTANT: To install/remove the guard it is necessary to remove the cooktop.
Attempting to install/remove the guard without disassembling the cooktop <u>will result in permanent damage to the appliance</u>.

Install the front guard as shown in figure 1.12:

1. Remove the backguard "**A**".
2. Remove the pan supports, the burner caps and the flame spreaders.
3. Unscrew cooktop fixing screws ("**B**" and "**C**" in figure below).
4. Remove the cooktop (keep attention not to damage the gaskets fitted above the burner cups - below the cooktop).
5. Install the front guard "**D**" by inserting the wire terminals into the proper holes above the control panel ("**E**" in figure below).
6. Reassemble the cooktop and the other components (steps from 4 to 1).
   Note: Take extra care not to damage the gaskets fitted above the burner cups (below the cooktop). If they are damaged they must be replaced.

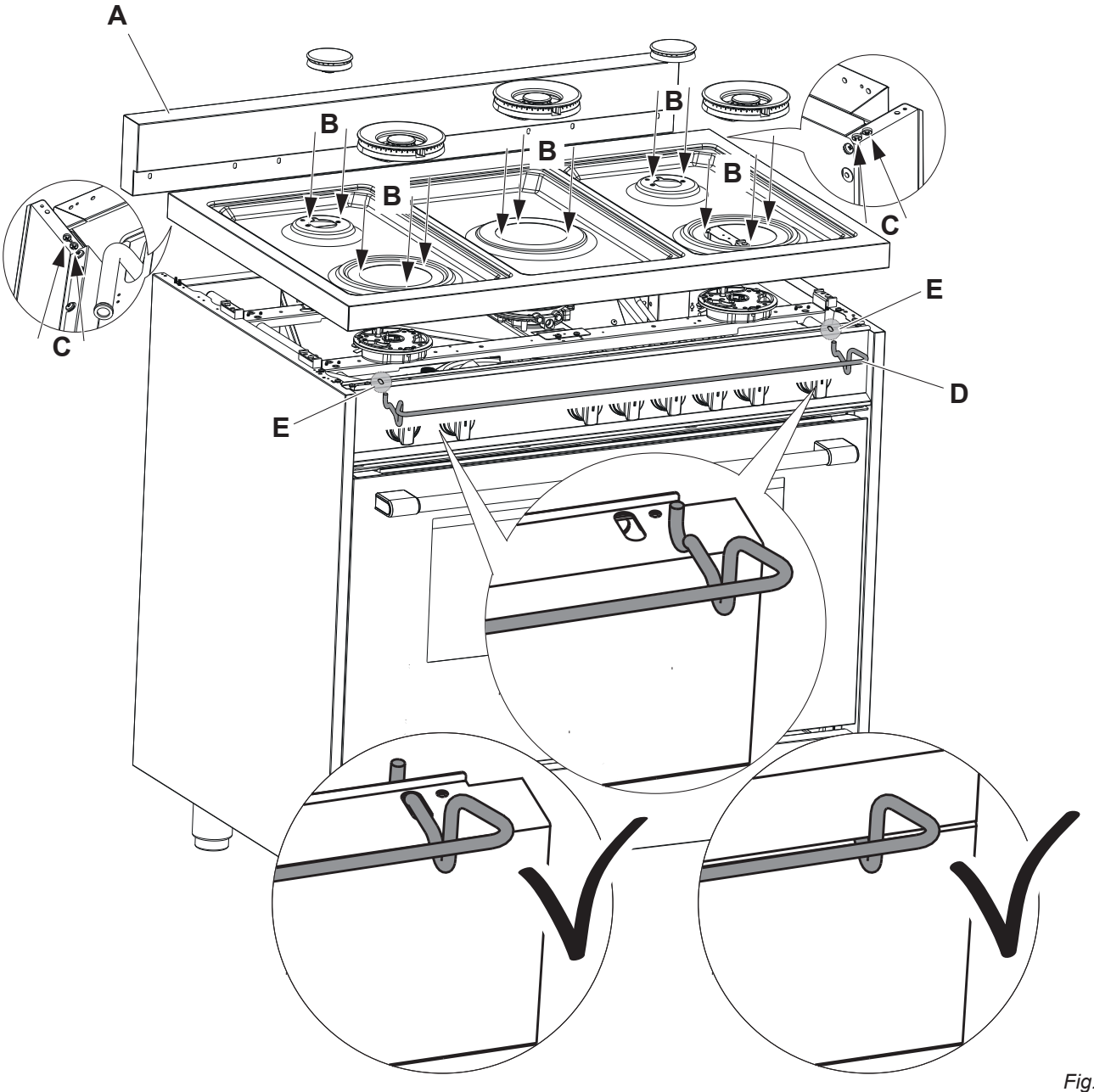

Fig. 1.12

All gas connections must be made according to national and local codes. This gas supply (service) line must be the same size or greater than the inlet line of the appliance. Sealant on all pipe joints must be resistant to the action of LP/Propane gas.

The range is equipped for the use with NATURAL gas. It is design-certified by CSA International for NATURAL and L.P. gases with appropriate conversion.

The model/serial rating plate, located below the bottom drawer, has information on the type of gas that can be used. If this information does not agree with the type of gas available, check with the local gas supplier. See page from 18 to 24 for L.P. gas conversion instructions.

1. Manual Shut-off Valve (fig: 2.1):

A manual shut-off valve must be installed in an accessible location in the gas line external to the appliance for the purpose of turning on or shutting off gas to the appliance (In Massachusetts such shutoff devices should be approved by the Board of State Examiners of Plumbers & Gas Fitters).
This valve should be located in the same room as the range and should be in a location that allows ease of opening and closing (in a position where it can be reached quickly in the event of an emergency).
Do not block access to the shutoff valve. The valve is for turning on or shutting off gas to the appliance.

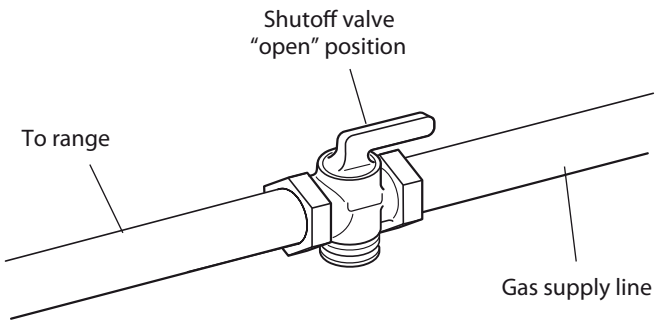

Fig. 2.1

2. Pressure Regulator:

a. All heavy duty, commercial type cooking equipment must have a pressure regulator on the incoming service line for safe and efficient operation, since service pressure may fluctuate with local demand.
Before installing the regulator mount the 1/2" NPT (conical) male connector to the regulator (see picture 2.2).
Gasket supplied has to be placed between 1/2" NPT (conical) connector/extension pipe male pipe fitting (see picture 2.3).
The regulator supplied with this range must be installed before any gas connections are made.
Use supplied pressure regulator only.

b. Assemble the extension pipe + pressure regulator group to the range manifold interposing the gasket supplied (see pictures 2.4, 2.5).

WARNING

Explosion Hazard

Use a new CSA or UL approved gas supply line.

Install a shut-off valve.

Securely tighten all gas connections.

If connected to LP, have a qualified person make sure gas pressure does not exceed 14" water column.

Examples of a qualified person include licensed heating personnel, authorized gas company personnel, and authorized service personnel.

Failure to do so can result in death, explosion, or fire.

PRESSURE REGULATOR INSTALLATION

STEP 1

Mount the 1/2” NPT (conical) male connector to the pressure regulator and tighten by using a wrench.
Do not over tighten the connector.
Over tightening may crack regulator.

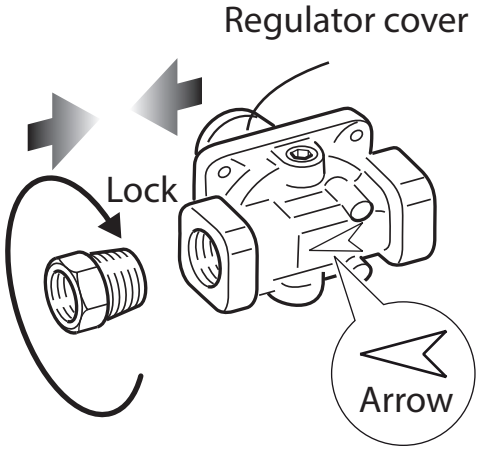

Fig. 2.2

STEP 2

Assemble the 1/2” NPT connector + pressure regulator group to the extension pipe interposing the gasket supplied.
The regulator cover must be oriented toward the front side of the range.

IMPORTANT: use two wrenches to tighten the connection.

Insert the extension pipe into the supplied support bracket “B” as shown:

- bend in the metal tab 90 degrees to allow the pipe to be fitted into the bracket (detail #1);
- bend the metal tab back into its original position to secure (detail #2).

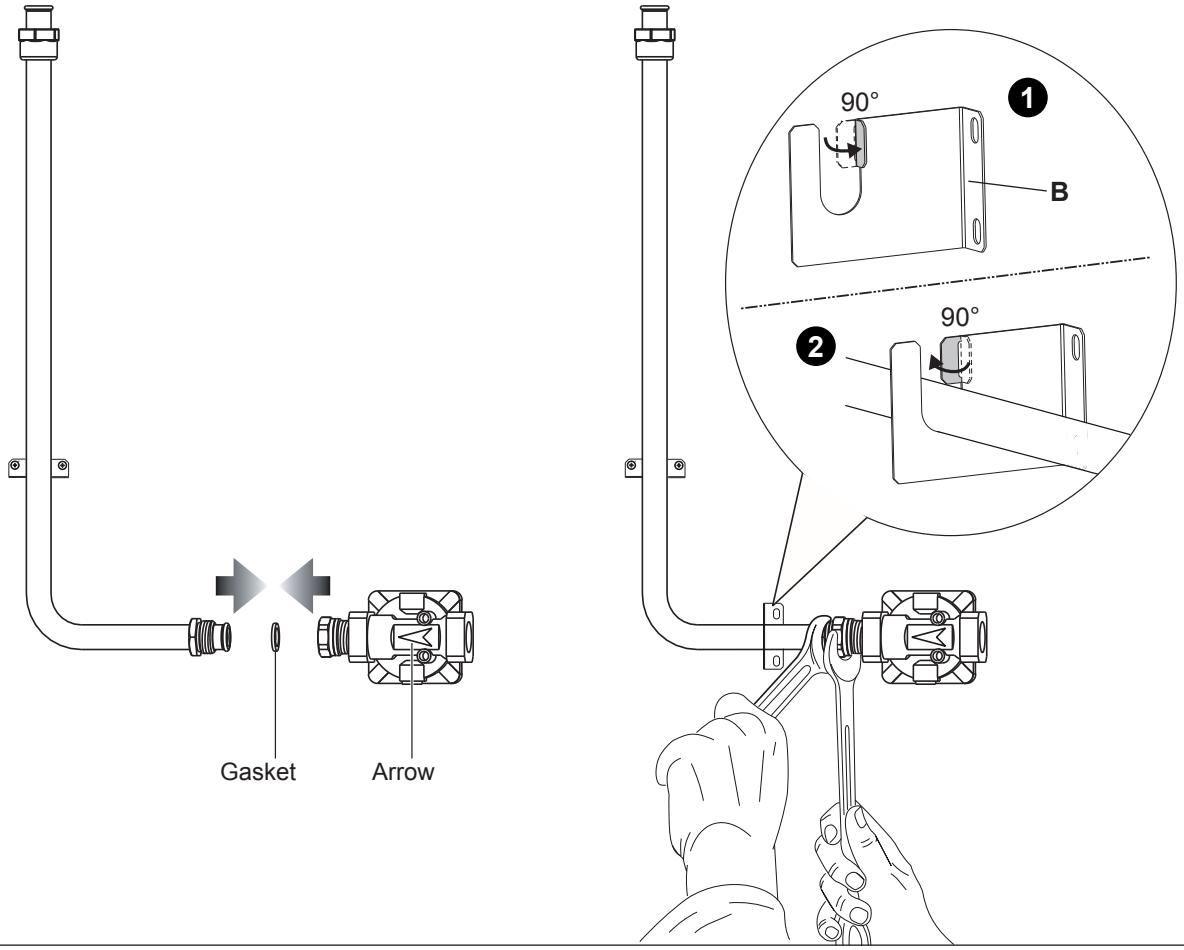

Fig. 2.3

STEP 3

Assemble the extension pipe + pressure regulator group to the range manifold interposing the gasket supplied.
The regulator cover must be ordiented toward the front side of the range.

IMPORTANT: use two spanners to tighten the connection.

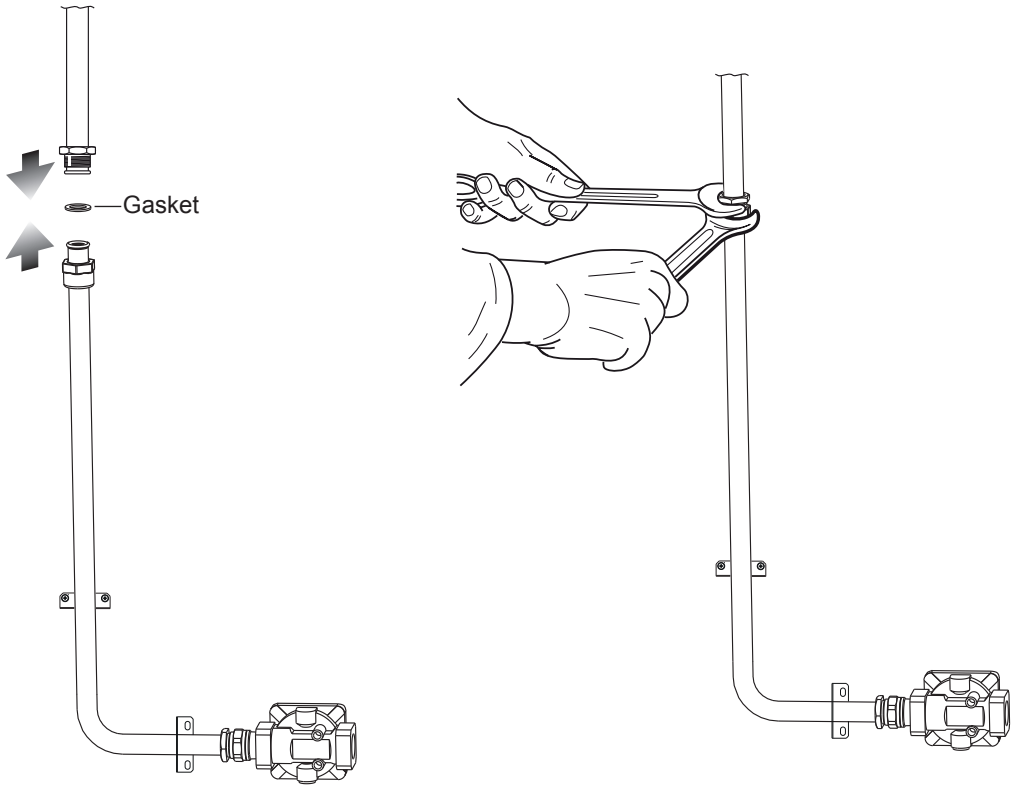

Fig. 2.4

STEP 4

Fix the extension pipe support bracket onto the back of the range using the two supplied screws.

Take care to ensure the bracket is fitted the right way up with the opening at the top.

The regulator cover must be ordiented toward the front side of the range.

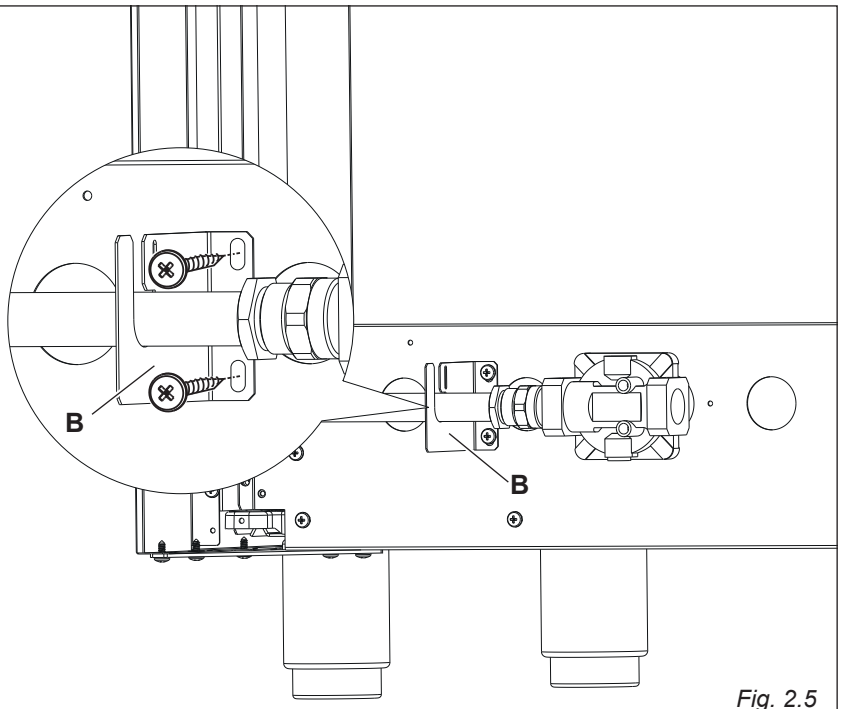

Fig. 2.5

GAS CONNECTION SPECIFICATION

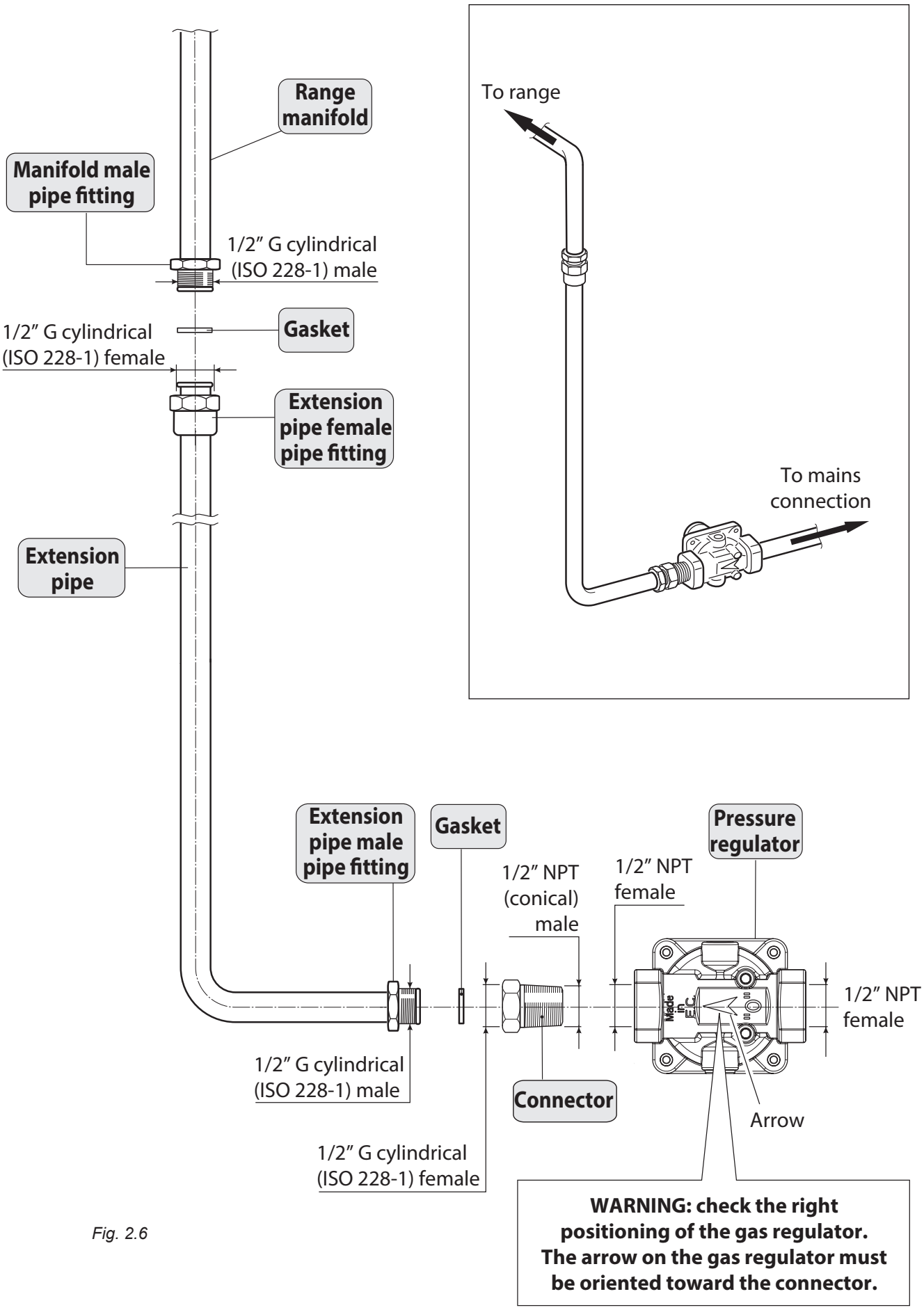

Fig. 2.6

TEST POINT ADAPTER
The Test Point adapter is available from the After-Sales Service.

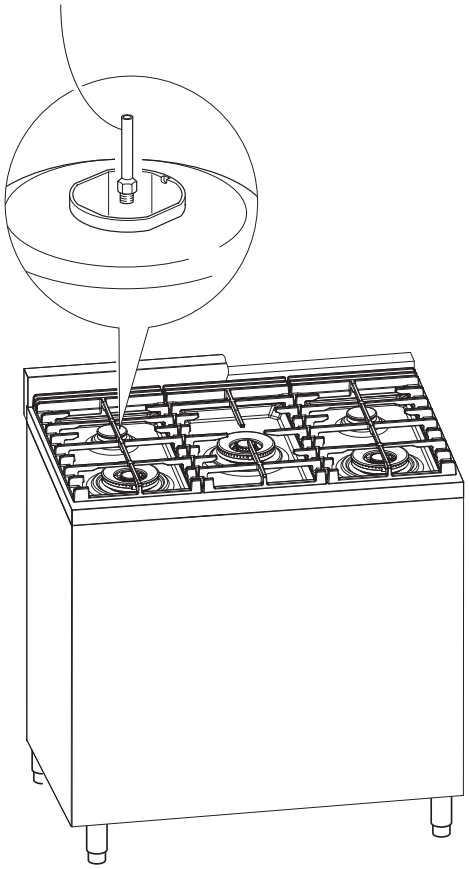

Fig. 2.7

c. Any conversion required must be performed by your dealer or a qualified licensed technician or gas service company. Please provide the service person with this manual before work is started on the range. (Gas conversions are the responsibility of the dealer or end user.)

d. This range can be used with NATURAL or LP/PROPANE gas. It is shipped from the factory adjusted for use with NATURAL gas.

e. Manifold pressure should be checked with a manometer and by operating as below detailed:
   - Remove the injector from the rear left (or rear right) burner and mount the proper test point adapter which is available from the After-Sales Service (see side figure and the “OPERATIONS TO BE PERFORMED WHEN SUBSTITUTING THE INJECTORS OF THE COOKTOP BURNERS” chapter).
   - Turn the rear left (or rear right) burner control knob to the maximum position.
   - Press the knob and keeping it pressed check the manifold pressure with a manometer; NATURAL gas requires 4.0” W.C.P. and LP/PROPANE requires 11.0” W.C.P.
   - Incoming line pressure upstream from the regulator must be 1” W.C.P. higher than the manifold pressure in order to check the regulator.
   - The regulator used on this range can withstand a maximum input pressure of 1/2 PSI (14.0” W.C.P). If the line pressure is in excess of that amount, a stepdown regulator will be required.

f. The appliance, its individual shut-off valve, and pressure regulator must be disconnected from the gas supply piping system during any pressure testing of that system at pressures in excess of 1/2 PSI (3.5 kPa).

g. The appliance must be isolated from the gas supply piping system by closing its individual manual shut-off valve during any pressure testing of the gas supply piping system at test pressure equal to or less than 1/2 PSI (3.5 kPa).

3. Flexible Connections:

If local codes permit, CSA or UL design-certified, flexible metal appliance connector is recommended for connecting this range to the gas supply line. Do Not kink or damage the flexible connector when moving the range. The pressure regulator has 1/2” NPT female pipe threads.You will need to determine the fittings required, depending on the size of your gas supply line, flexible metal connector and shutoff valve.

4. Rigid Pipe Connections:

If rigid pipe is used as a gas supply line, a combination of pipe fittings must be used to obtain an in-line connection to the range. All strains must be removed from the supply and fuel lines so range will be level and in line.

- Use joint compounds and gaskets that are resistant to action of natural or propane gas on all male pipe threads.
- Do not over tighten gas fitting when attaching to pressure regulator. Over tightening may crack regulator.

5. Leak Testing:

IMPORTANT: Leak testing of the appliance shall be conducted as follows:

- After final gas connection is made, turn on manual gas valve and test all connections in gas supply piping and appliance for gas leaks with a soapy water solution. During this test all appliance gas valves have to be closed.
- In order to avoid property damage or serious personal injury, never use a lighted match. If a leak is present, tighten joint or unscrew, apply more joint compound, tighten again and retest connection for leak.

CONVERSION TO LP/PROPANE GAS (OR CONVERSION BACK TO THE ORIGINAL GAS - NATURAL GAS)

Every range is provided with a set of injectors for the various types of gas.
Select the injectors to be replaced according to the “INJECTORS TABLE”.
The nozzle diameters, expressed in hundredths of a millimetre, are marked on the body of each injector.

CAUTION: Save the injectors removed from the appliance for future use.

SETTING THE PRESSURE REGULATOR

The pressure regulator is accessible by removing the storage drawer; the pressure regulator is positioned on the rear right side of the range (fig. 2.9).

To remove the storage drawer:

1. Open the drawer completely (fig. 2.8)
2. Move down the lever of left guide (fig. 2.8a) and up the lever of right guide (fig. 2.8b).
3. Remove the drawer holding the levers in the same position (fig. 2.8).

WARNING:
- **Do not remove storage drawer while hot.**
- **Do not remove storage drawer during operation.**
- **Be sure storage drawer is empty before removing.**
- **Always position your hand below the front panel to open/close the storage drawer.**

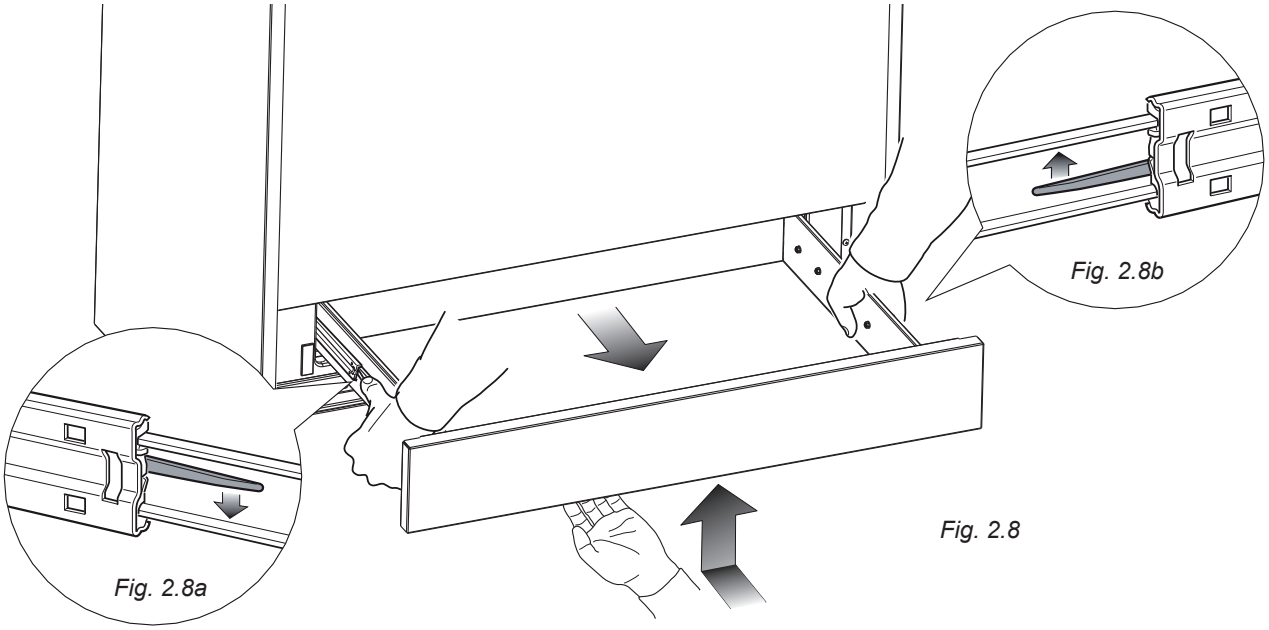

Fig. 2.8

To set the pressure regulator (fig. 2.9):

1. Unscrew the regulator cover.
2. Unscrew the "**A**" component, reverse and screw it according to the LP/PROPANE (or NATURAL GAS) regulation.

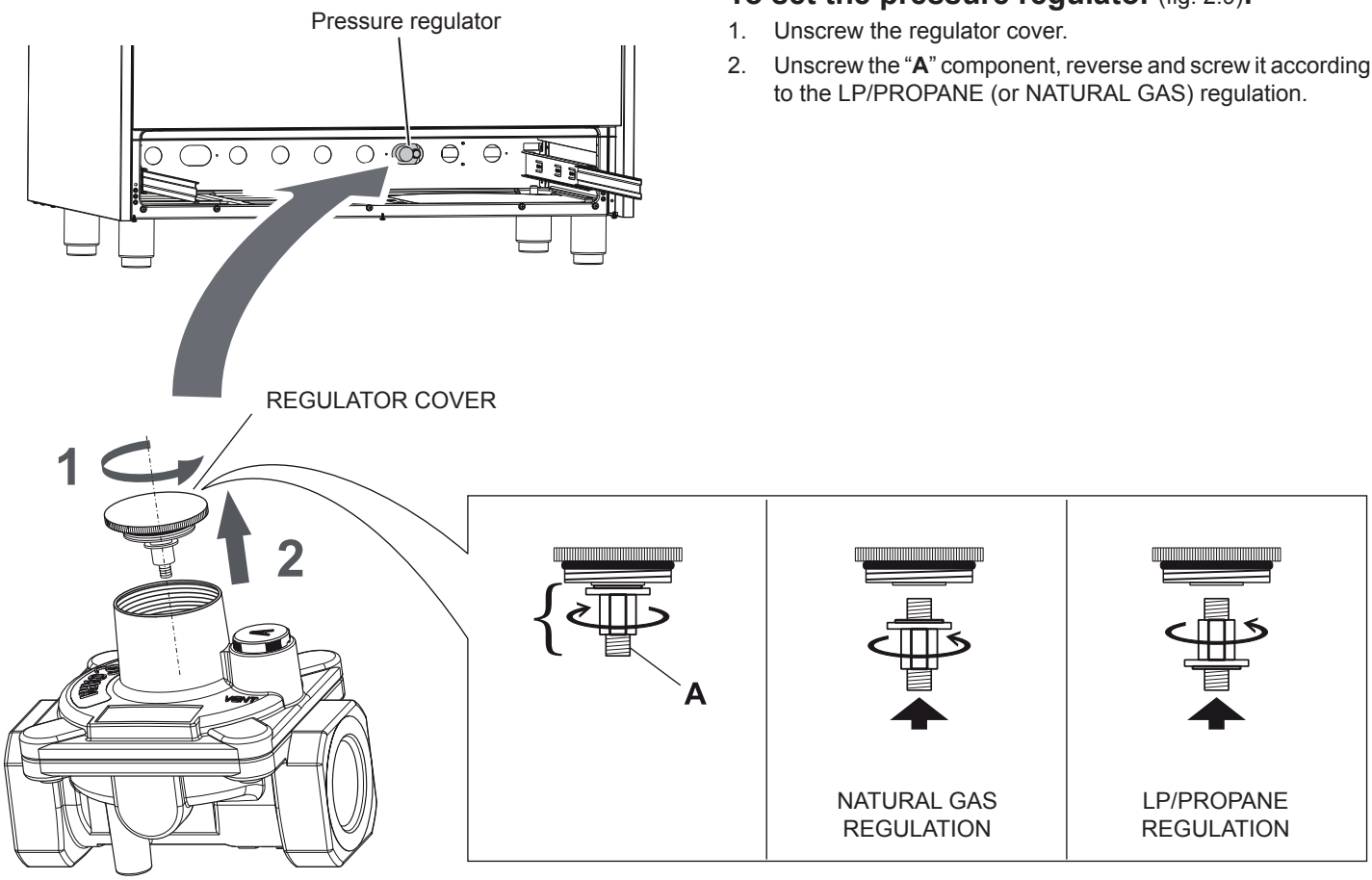

Fig. 2.9

Fitting the storage drawer:

1. Insert the drawer guides into the range guides (fig. 2.10).
2. Gently close the drawer completely; the safety catches will automatically hook into place.

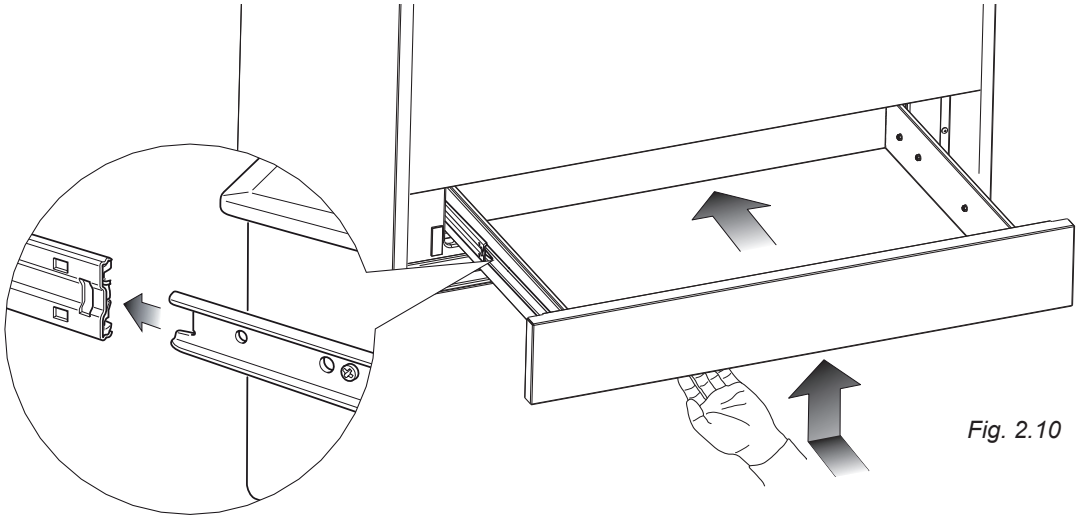

Fig. 2.10

INJECTORS TABLE

		NOMINAL POWER	REDUCED POWER	LP/PROPANE 11” W.C.P.	NATURAL GAS 4” W.C.P.
BURNERS		BTU/hr	BTU/hr	Ø injector [1/100 mm]	Ø injector [1/100 mm]
Semirapid (SR)		8000	1500	85	139
Triple-ring (TR)		12000	5000	102	170
Dual (D)	Inner crown	2800 (1)	1100 (1)	50 (3)	80 (3)
	Outer crown	17000 (2)	6500 (2)	80 (x2) (4)	139 (x2) (4)
Oven burner		17000	3200	120	208
Broil burner		13000	-	105	184

(1) Power calculated only with inner crown operating
(2) Power calculated with inner and outer crown operating
(3) inner crown (“**J_3**” in figure 2.13)
(4) outer crown (“**J_4**” in figure 2.13)

OPERATIONS TO BE PERFORMED WHEN SUBSTITUTING THE INJECTORS OF THE COOKTOP BURNERS

- Remove the pan supports, the burner caps and the flame spreaders.
- Using a wrench substitute the nozzle injectors “**J_1**”, “**J_2**”, “**J_3**” and “**J_4**” (figs. 2.11, 2.12, 2.13) with those most suitable for the kind of gas for which it is to be used.
- Refit the flame spreaders, the burner caps and the pan supports.

The burners are conceived in such a way so as not to require the regulation of the primary air.

SEMI-RAPID BURNER

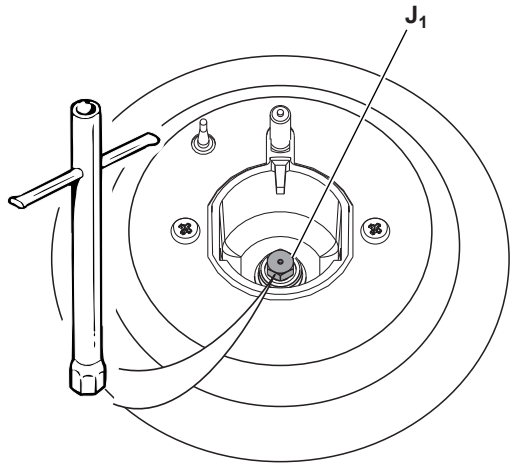

Fig. 2.11

TRIPLE-RING BURNER

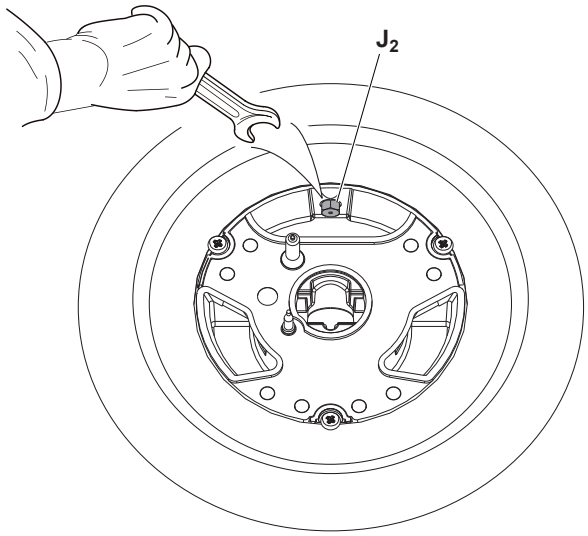

Fig. 2.12

DUAL BURNER

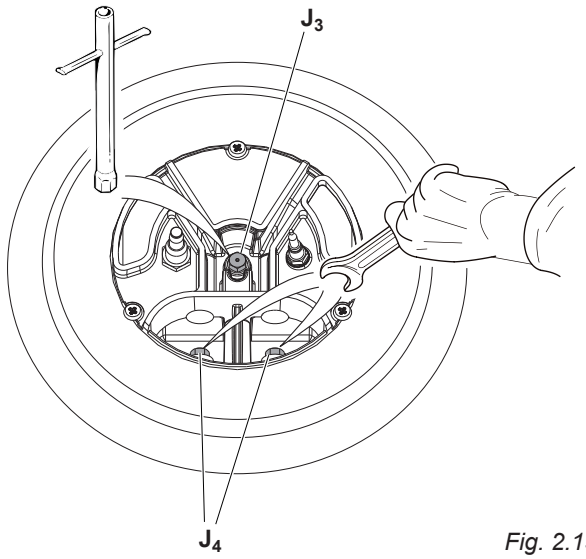

Fig. 2.13

SETTING THE BURNER MINIMUM

When switching from one type of gas to another, the minimum flow rate must also be correct: the flame should not go out even when passing suddenly from maximum to minimum flame.

To regulate the flame (fig. 2.14) follow the instructions below:

Triple-ring and semirapid burner

- Light the burner.
- Set the gas valve to LO position (minimum rate).
- Remove the knob.
- With a thin screwdriver, turn the regulation screw "**R_1**" until adjustment is correct.

Inside crown of DUAL burner

- Light the DUAL burner.
- Set the gas valve to ⦿ LO position (minimum rate of inner crown).
- Remove the knob
- With a thin screwdriver, turn the regulation screw "**R_2**" until adjustment is correct.

Outside crown of DUAL burner

- Light the DUAL burner.
- Set the gas valve to ⦿ LO position (minimum rate of outer crown and maximum rate of inner crown).
- Remove the knob.
- With a thin screwdriver, turn the regulation screw "**R_3**" until adjustment is correct.

For LP/PROPANE gas, tighten the adjustment screws completely.

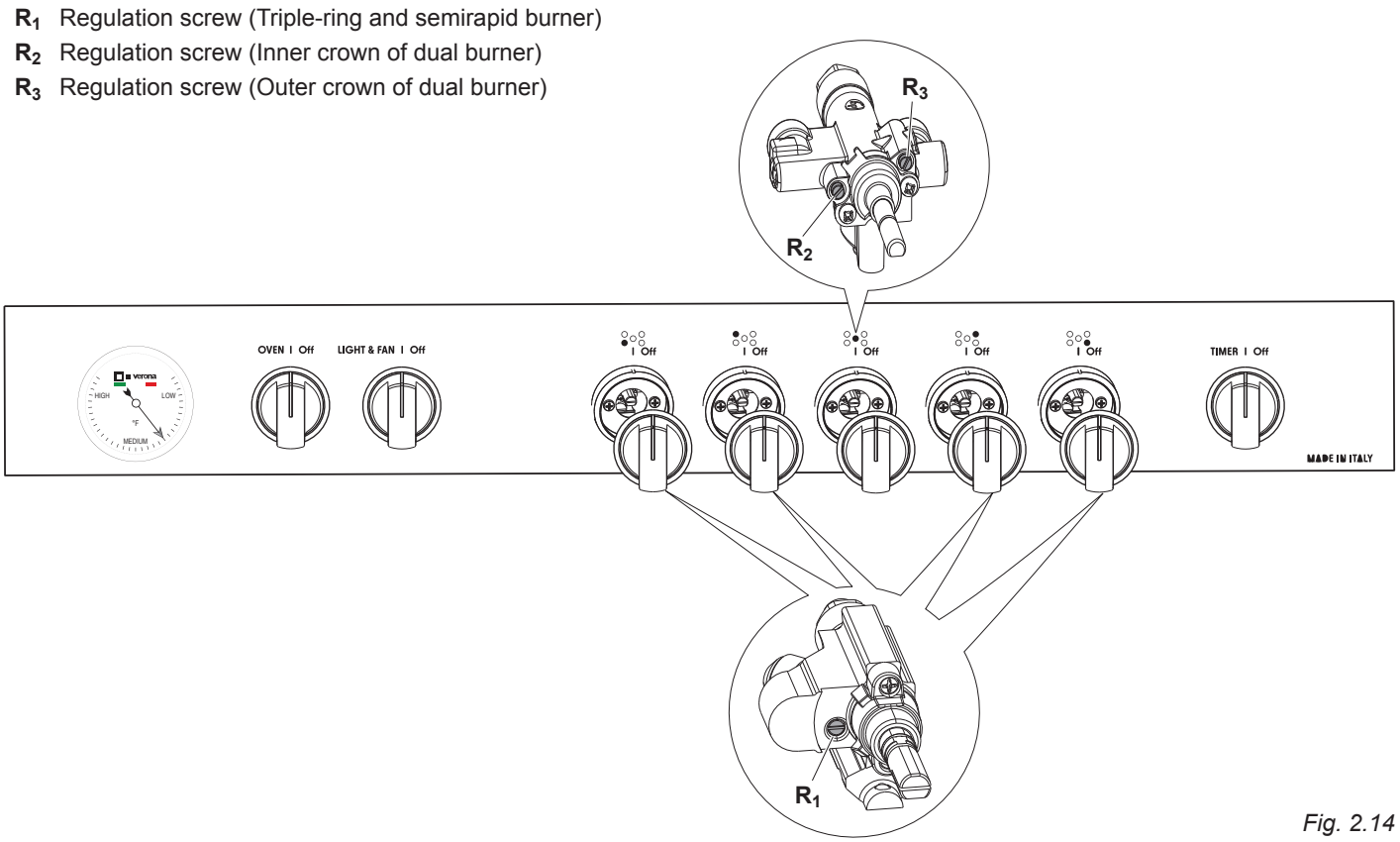

Fig. 2.14

OPERATIONS TO BE EXECUTED FOR THE REPLACEMENT OF THE INJECTOR OF THE OVEN BURNER

- Lift and remove the lower panel inside the oven.
- Gently unlock, from the burner, the safety valve probe "**V**" and the ignition electrode "**E**" (as indicated in fig. 2.15). Take care not to damage the probe and the ignition electrode.
- Unscrew and remove the burner securing screws "**A**" (fig. 2.15).
- Withdraw the burner as shown in figure 2.16.
- Using a 7 mm box spanner, unscrew the injector (indicated by the arrow in fig. 2.16) and replace it with a new one selected in accordance with the "Injectors table".
- Then replace the burner and the other components repeating the above steps in reverse order.
  IMPORTANT: Pay special attention to replace correctly the safety valve probe "V" and the ignition electrode "E" as per figure 2.15. Check the correct operation of the safety valve and the ignition electrode.

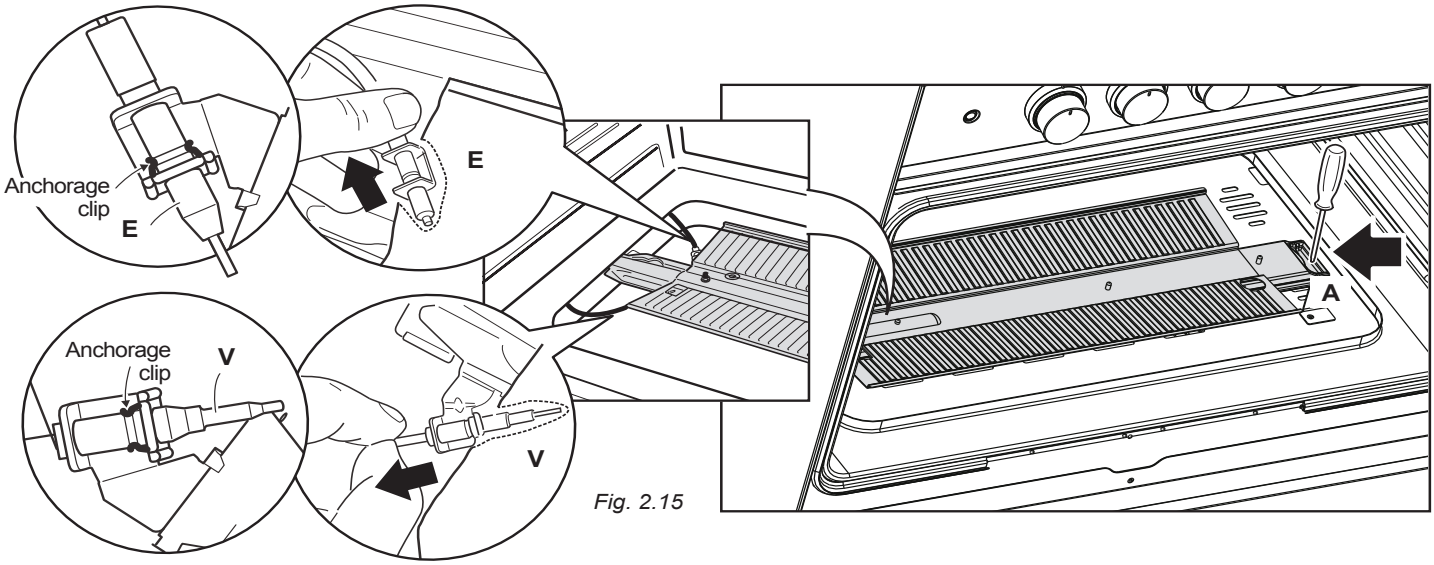

Fig. 2.15

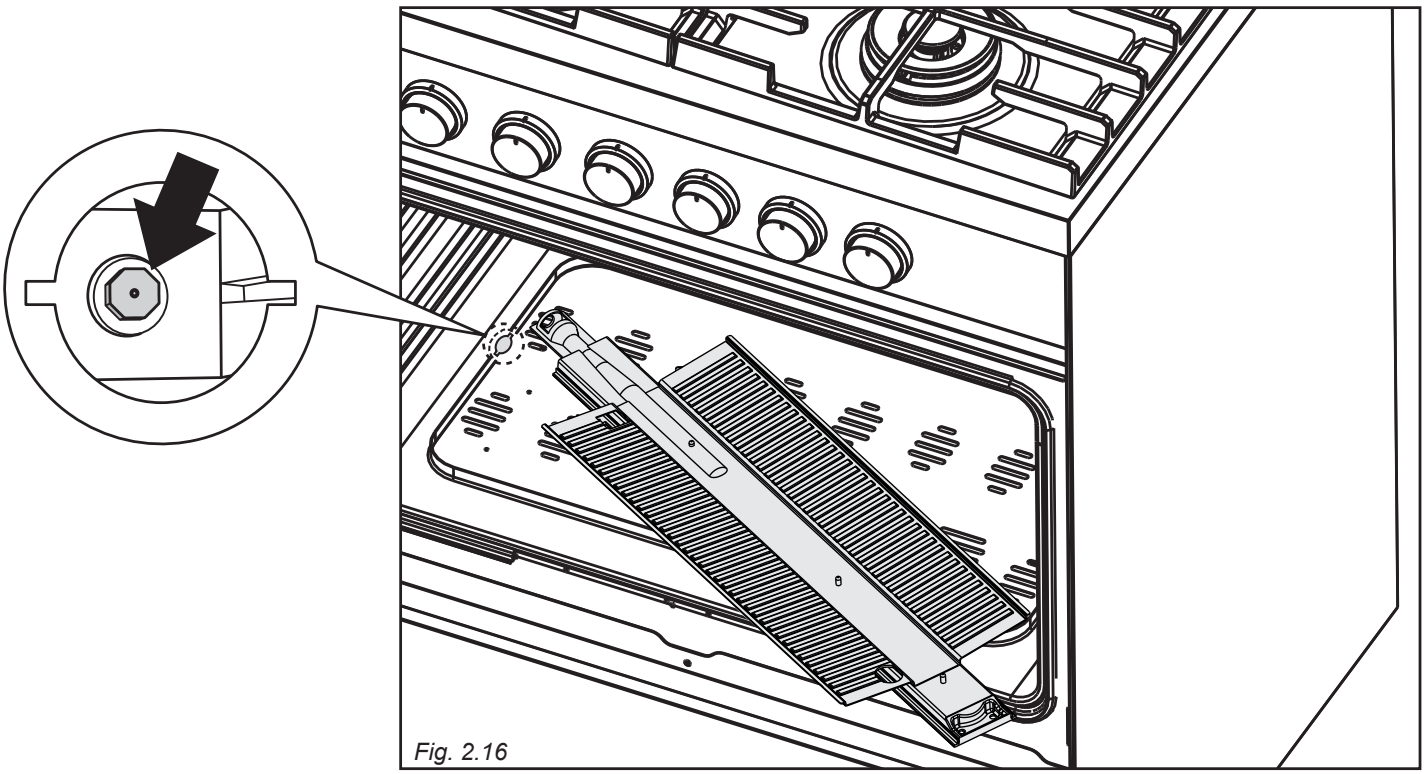

Fig. 2.16

OPERATIONS TO BE EXECUTED FOR THE REPLACEMENT OF THE INJECTOR OF THE BROIL BURNER

- Gently unlock, from the burner, the safety valve probe "**V**" and the ignition electrode "**E**" (as indicated in fig. 2.17). Take care not to damage the probe and the ignition electrode.
- Unscrew and remove the burner securing screw "**A**" (fig. 2.17).
- Withdraw the burner as shown in figure 2.18.
- Using a 7 mm box spanner, unscrew the injector (indicated by the arrow in fig. 2.18) and replace it with a new one selected in accordance with the "Injectors table".
- Then replace the burner and the other components repeating the above steps in reverse order.
  IMPORTANT: Pay special attention to replace correctly the safety valve probe "V" and the ignition electrode "E" as per figure 2.17. Check the correct operation of the safety valve and the ignition electrode.

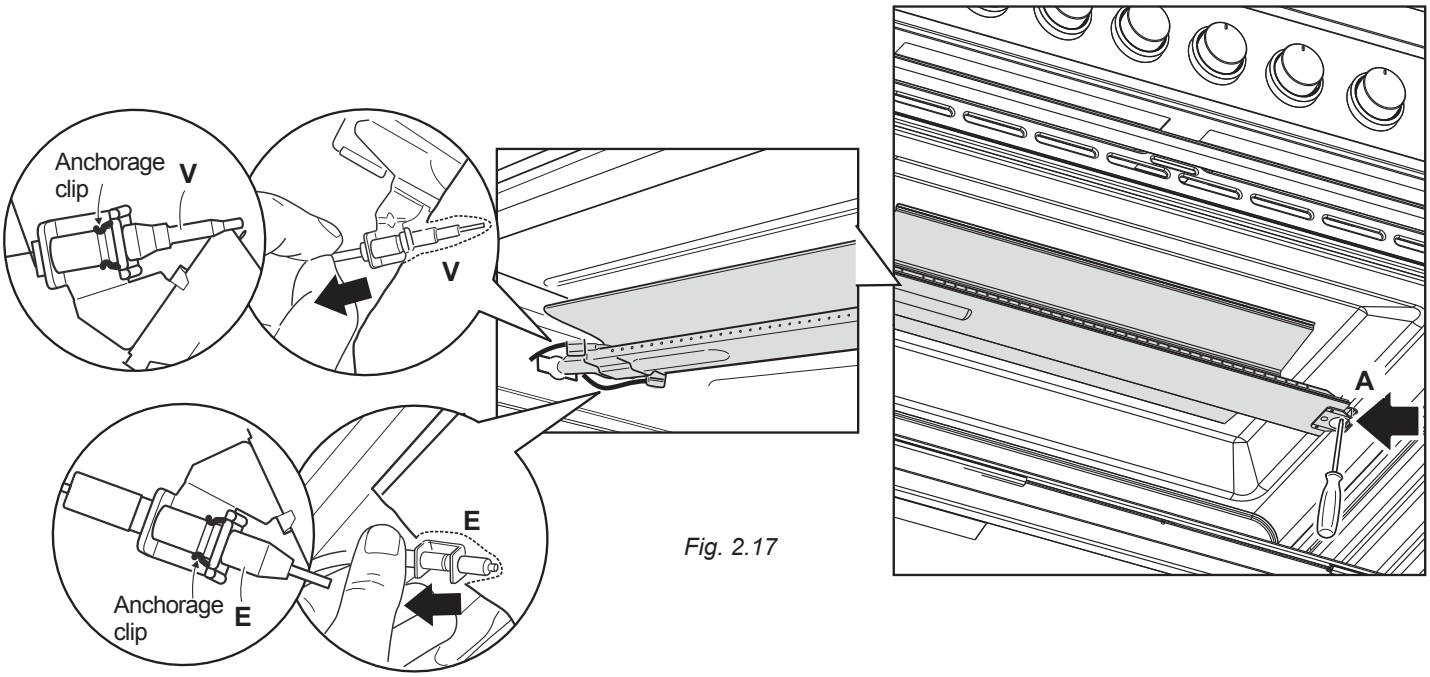

Fig. 2.17

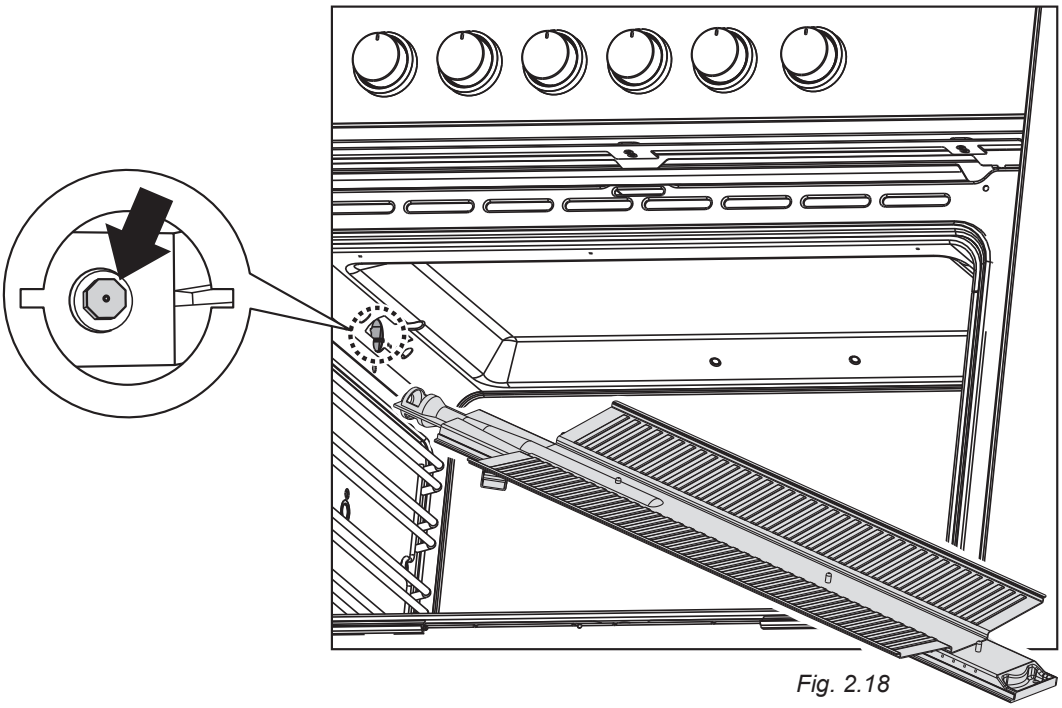

Fig. 2.18

ADJUSTMENT OF THE OVEN BURNER MINIMUM

This needs to be done only for the oven burner (the broil is a fixed capacity) by acting on the thermostat in the following way:

- Turn on the burner by setting the thermostat knob on position "**550✶**" (maximum).
- Remove the knob and unscrew the by-pass screw "**G**" (fig. 2.19) about three times by passing a small flat screwdriver (Ø 3 mm blade, 100 mm length) through the panel opening.
- Re-mount the knob and let the oven heat up for about 10 minutes, then bring the knob to position "**200**" (minimum) to operate the thermostat by-pass.
- After having removed the knob again and being very careful not to turn the tap rod, slowly screw the by-pass screws "**G**" (fig. 2.19) until you obtain a flame of 3-4 mm in height. The flame should not go out even when passing suddenly from maximum to minimum flame.

N.B. For LP/PROPANE gas the by-pass screw must be fixed thoroughly.

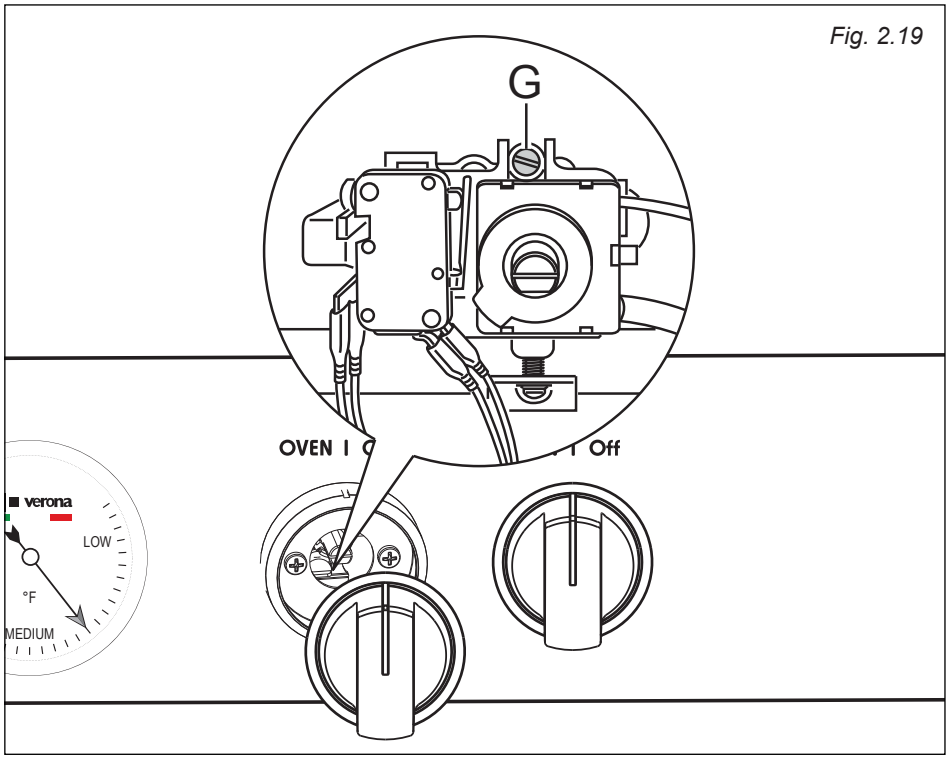

Fig. 2.19

After regulation repeat the operations indicated in paragraph "2. PRESSURE REGULATOR" at page 13 and 17.
If the range has been disconnected and then connected again to the gas supply line repeat the operations indicated in paragraph "5. LEAK TESTING" at page 17.

IMPORTANT:

- After conversion to LP/PROPANE gas has been carried out affix near the data plate the conversion label supplied and also affix a conversion label at page 3 of this instruction manual.
- After conversion back to the original gas (NATURAL GAS) has been carried out remove, near the data plate and at page 3 of this instruction manual, the LP/PROPANE conversion labels. Save the labels removed for future use.

WARNING!!

Electrical Shock Hazard

Plug into a grounded 3-prong outlet.
Do not remove ground prong.
Do not use an adapter.
Failure to follow these instructions can result in death, fire, or electrical shock.

WARNING
VERY IMPORTANT

Before any operation of maintenance disconnect the appliance from the electrical main supply.

If codes permit and a separate ground wire is used, it is recommended that a qualified electrician determine that the ground path is adequate.
Check with a qualified electrician if you are not sure whether the range is properly grounded.
Do Not ground to a gas pipe.

A 120-volt, 60-Hz, AC-only, 15-ampere, fused electrical supply is required.
A time-delay fuse or circuit breaker is recommended.
It is recommended that a separate circuit serving only this appliance be provided.

The outlet must be checked by a qualified electrician to see if it is wired with correct polarity.

This appliance, when installed, must be electrically grounded in accordance with local codes.

Recommended ground method

For your personal safety, this range must be grounded.
This range is equipped with a 3-prong ground plug.
To minimize possible shock hazard, the cord must be plugged into a mating 3-prong ground-type outlet, grounded in accordance with the National Electrical Code ANSI/ NFPA 70 latest edition and local codes and ordinances.
If a mating outlet is not available, it is the personal responsibility and obligation of the customer to have a properly polarized and grounded, 3-prong outlet installed by a qualified electrician.

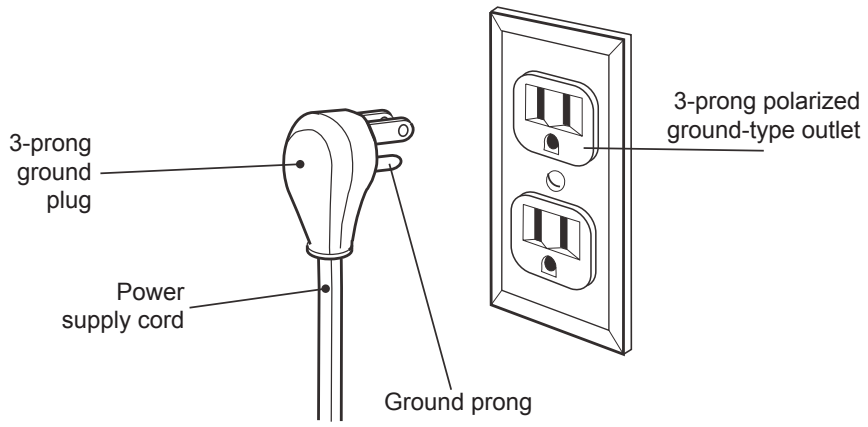

Fig. 3.1

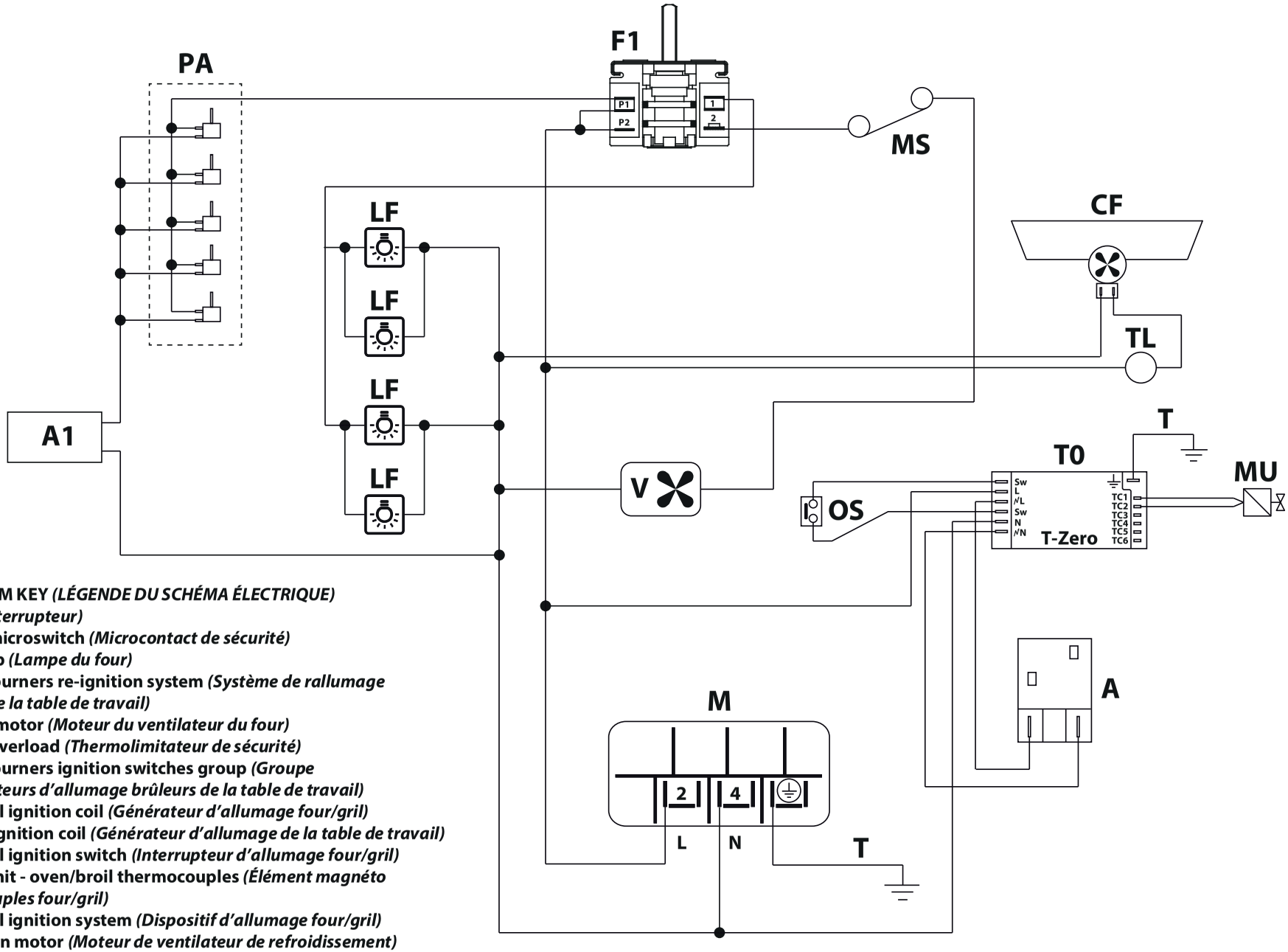

ELECTRIC DIAGRAM KEY ***(LÉGENDE DU SCHÉMA ÉLECTRIQUE)***

F1	**Switch** ***(Interrupteur)***
MS	**Security microswitch** ***(Microcontact de sécurité)***
LF	**Oven lamp** ***(Lampe du four)***
R	**Cooktop burners re-ignition system** ***(Système de rallumage brûleurs de la table de travail)***
V	**Oven fan motor** ***(Moteur du ventilateur du four)***
TL	**Thermal overload** ***(Thermolimitateur de sécurité)***
PA	**Cooktop burners ignition switches group** ***(Groupe d'interrupteurs d'allumage brûleurs de la table de travail)***
A	**Oven/broil ignition coil** ***(Générateur d'allumage four/gril)***
A1	**Cooktop ignition coil** ***(Générateur d'allumage de la table de travail)***
OS	**Oven/broil ignition switch** ***(Interrupteur d'allumage four/gril)***
MU	**Magnet unit - oven/broil thermocouples** ***(Élément magnéto thermocouples four/gril)***
T0	**Oven/broil ignition system** ***(Dispositif d'allumage four/gril)***
CF	**Cooling fan motor** ***(Moteur de ventilateur de refroidissement)***
M	**Terminal block** ***(Bloc de raccordement)***
T	**Earth connection** ***(Connexion de mise à la terre)***

The manufacturer cannot be held responsible for possible inaccuracies due to printing or transcription errors in the present booklet.
The manufacturer reserves the right to make all modifications to its products deemed necessary for manufacture or commercial reasons at any moment and without prior notice, without jeopardising the essential functional and safety characteristics of the appliances.